Cat.no.:E-PS

Cat.no.:E-GGC

Cat.no.:E-CSS

Cat.no.:E-FSV

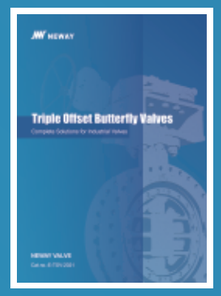

Cat.no.:TOBV

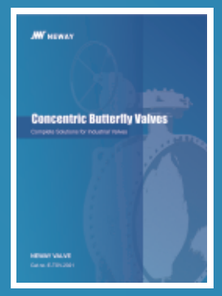

Cat.no.:E-CBV

Cat.no.:E-CV

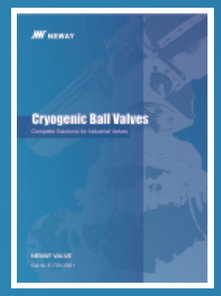

Cat.no.:E-CBV

Cat.no.:E-FWBV

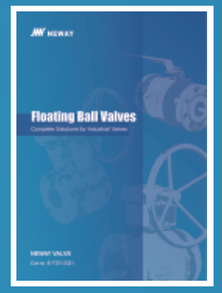

Cat.no.:E-FBV

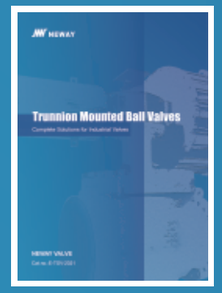

Cat.no.:E-TMBV

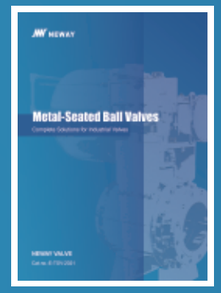

Cat.no.:E-MSBV

NEWAY

NEWAY VALVE (SUZHOU) CO., LTD.

No.666 Taishan Road, Suzhou New District, P.R. China
Post Code: 215129
Tel: 86-512-666-51365
Fax: 86-512-666-18930-2102
E-mail: overseas.sales@neway.com.cn
http://www.newayvalve.com

Distributed by:

Cat.no.:E-DAV-2021

NEWAY

API 594 Dual Plate Check Valves
API 6D Axial Flow Check Valves

Complete Solutions for Industrial Valves

NEWAY VALVE

Cat.no.:E-DAV-2021

Table of Contents

Introduction

1 Quality Commitment

2 How To Order

3 Product Range

4~5 Performance Comparison

Dual Plate Wafer Check Valve

6~8 Design Features

9 Parts & Materials

10~19 Dimensions & Weights

Axial Flow Check Valve

20~23 Design Feature

24 Parts & Materials

25~28 Dimensions & Weights

Complete Solutions for Industrial Valves

As a global leader of valve manufacturing, Neway (SSE:603699) is dedicated to the production, research, and development of industrial valves. Neway is committed to providing complete valve solutions to all industries through advanced engineering and innovation.

Neway's product line includes Ball, Butterfly, Gate, Globe, Check, Nuclear, Control, Subsea, Safety valves. Our high quality standards and innovative ability are recognized by many global end users and EPCs. Neway valves are utilized in a wide variety of industries and working conditions such as Refining, Chemical, Coal Chemical, Offshore(including subsea), Air Separation, LNG, Nuclear Power, Power Generation, and Pipeline Transmission applications.

Facilities & Service

Neway has developed a sophisticated multi-plant management system operating one valve assembly plant, one API6A valve plant, three foundries, and one R&D center. Our largest assembly plant was expanded in 2013, and it now covers 35,000 square meters.

Advanced software (ANSYS, FE-Safe, CF-Design, Siemens PLM and NX) is applied here at Neway for the Research & Development of products. We use SAP to control the traceability and status of all products during the manufacturing process. In order to ensure the safety, eco-friendliness, and reliability of our products, we use the most advanced fire-safe, cryogenic, high pressure, and fugitive emission test equipment.

As part of Neway's global strategy, to provide better service to our customers, we have established our overseas subsidiaries in USA, Netherlands, Italy, Singapore, and Dubai along with over 80 agents and distributors worldwide.

Quality Assurance

Neway is dedicated to the pursuit of "Zero Defect". We maintain a quality management system that encompasses our entire operation from order entry, to final inspection. Through Neway's continuous efforts, our products have sucessfully achieved industrial certificates including ISO 9001, API 6A, API 6D, CE/PED, ASME N & NPT, TA-Luft, ABS, CU-TR, and Fire-Safe approvals.

API 6D

ISO9001

CE/PED

API 6A

Fire Safe Test Certificate

TA Luft

ABS

AD2000

Neway recognizes the importance of valve quality for the safety and protection of personnel health and property. It is our quality commitment to focus our resources to provide our customers with first class products at a competitive price, designed, manufactured, inspected and tested in accordance with our customers specifications and complying with all international standards.

Current industrial standards do not always take into consideration the likelihood and consequences of possible deterioration in service, related to specific service fluids or the external environments in which they operate. Therefore we request that our customers communicate with our engineering department. Our valve optimization program continuously strives to provide valves that withstand deterioration in service, and ensure safety over the valves expected lifetime.

NEWAY reserves the right to change design, materials or specifications without notice and free of obligation to furnish or install such changes on products previouly sold.

How To Order

8	SBN	3	W	,	C00	/	SA/SBN	SBS
①	②	③	④		⑤		NO.8	NO.332
							⑥	

Neway figure numbers are designed to cover essential features.
When ordering,please show figure number to avoid misunderstanding of your requirements.
However a detailed description must accompany with any special orders.

① Valve Size

② Valve Type

Valve Type	Dual-plate Check Valve	Axial Flow Type Check Valve
Symbol	SBN/SBS	SA

③ Class

Code	1	3	4	6	9	15	25
Class	150	300	400	600	900	1500	2500

④ End Connection

End	Wafer	LUG	Double-flange/Raised Face Flanged End	RTJ Flange End	Butt-Welding End
Symbol	W	L	R	J	B(SA/SBN)

⑤ Shell Material

Material	Material	L20	L21	H01	H02	H03	S00	S01	S02	S03	CD3MN
ASTM Ref	A216 Gr. WCB	A352 Gr. LCB	A352 Gr. LCC	A217 Gr. WC6	A217 Gr. WC9	A217 Gr. C5	A351 Gr. CF8	A351 Gr. CF8M	A351 Gr. CF3	A351 Gr. CF3M	A890 Gr. CD3MN

⑥ Trim Material

SA/SBN

API600 Trim Number	Symbol	Disc Surface	Seat Surface	Hinge Material
1	1	13%Cr	13%Cr	ASTM A276-410
2	2	18%Cr,8%Ni	18%Cr,8%Ni	ASTM A276-304
5	5	Stellite	Stellite	ASTM A276-410
8	8	13%Cr	Stellite	ASTM A276-410
9	9	Monnel	Monel	Ni Cu Alloy Monel
10	10	18%Cr,8%Ni	18%Cr,8%Ni	ASTM A276-316
12	12	18%Cr,8%Ni	Stellite	ASTM A276-316
13	13	Alloy 20 19%Cr,29%Ni	Alloy 20 19%Cr,29%Ni	ASTM B473
16	16	Stellite	Stellite	ASTM A276-316
	20	Bronze	Bronze	Bronze

SBS

Stem		Disc		Seat	
Code	Material	Code	Material	Code	Material
1	F416	2	CF8	1	EPDM
2	F304	3	CF8M	2	NBR
3	F316	4	M30-C	3	VITON
4	MONEL K500	5	ZQAL9-4	A	EPDM-1
5	17-4PH	8	C95500		
6	1Cr13	A	ZQAL9-2		
7	F316L	C	CF3M		
8	F304L	J	904L-ZZ		
9	F51	K	A890 4A		
C	3Cr13	E	A890 6A		
L	1Cr17Ni8	N	C95800		

Note 1.Trim number 1 to 13 are same as API 600.
2.Trim number 1 may be replaced by trim number 8 without notice.
3.Hinge material ASTM A276 316 may be replaced by ASTM A276 316L.

NEWAY reserves the right to change design, materials or specifications without notice and free of obligation to furnish or install such changes on products previouly sold.

Product Range

Dual Plate Check Valve

Class	150			300			600			900			1500			2500		
Type	Wafer	Lug	Flanged	Wafer	Lug	Flanged	Wafer	Lug	Flanged	Wafer	Lug	Flanged	Wafer	Lug	Flanged	Wafer	Lug	Flanged
2”	◆ ◇	◆ ◇	◆ ◇	◆ ◇	◆ ◇	◆ ◇	◆ ◇	◆ ◇	◆ ◇	◆	◆	◆	◆	◆	◆	◆	◆	◆
2-1/2”	◆ ◇	◆ ◇	◆ ◇	◆ ◇	◆ ◇	◆ ◇	◆ ◇	◆ ◇	◆ ◇	◆	◆	◆	◆	◆	◆	◆	◆	◆
3”	◆ ◇	◆ ◇	◆ ◇	◆ ◇	◆ ◇	◆ ◇	◆ ◇	◆ ◇	◆ ◇	◆	◆	◆	◆	◆	◆	◆	◆	◆
4”	◆ ◇	◆ ◇	◆ ◇	◆ ◇	◆ ◇	◆ ◇	◆ ◇	◆ ◇	◆ ◇	◆	◆	◆	◆	◆	◆	◆	◆	◆
5”	◆ ◇	◆ ◇	◆ ◇	◆ ◇	◆ ◇	◆ ◇	◆ ◇	◆ ◇	◆ ◇	◆	◆	◆	◆	◆	◆	◆	◆	◆
6”	◆ ◇	◆ ◇	◆ ◇	◆ ◇	◆ ◇	◆ ◇	◆ ◇	◆ ◇	◆ ◇	◆	◆	◆	◆	◆	◆	◆	◆	◆
8”	◆ ◇	◆ ◇	◆ ◇	◆ ◇	◆ ◇	◆ ◇	◆ ◇	◆ ◇	◆ ◇	◆	◆	◆	◆	◆	◆	◆	◆	◆
10”	◆ ◇	◆ ◇	◆ ◇	◆ ◇	◆ ◇	◆ ◇	◆ ◇	◆ ◇	◆ ◇	◆	◆	◆	◆	◆	◆	◆	◆	◆
12”	◆ ◇	◆ ◇	◆ ◇	◆ ◇	◆ ◇	◆ ◇	◆ ◇	◆ ◇	◆ ◇	◆	◆	◆	◆	◆	◆	◆	◆	◆
14”	◆ ◇	◆ ◇	◆ ◇	◆ ◇	◆ ◇	◆ ◇	◆ ◇	◆ ◇	◆ ◇	◆	◆	◆	◆	◆	◆			
16”	◆ ◇	◆ ◇	◆ ◇	◆ ◇	◆ ◇	◆ ◇	◆ ◇	◆ ◇	◆ ◇	◆	◆	◆	◆	◆	◆			
18”	◆ ◇	◆ ◇	◆ ◇	◆ ◇	◆ ◇	◆ ◇	◆ ◇	◆ ◇	◆ ◇	◆	◆	◆	◆	◆	◆			
20”	◆ ◇	◆ ◇	◆ ◇	◆ ◇	◆ ◇	◆ ◇	◆ ◇	◆ ◇	◆ ◇	◆	◆	◆	◆	◆	◆			
24”	◆ ◇	◆ ◇	◆ ◇	◆ ◇	◆ ◇	◆ ◇	◆ ◇	◆ ◇	◆ ◇	◆	◆	◆	◆	◆	◆			
30”	◆ ◇	◆ ◇	◆ ◇	◆ ◇	◆ ◇	◆ ◇	◆ ◇	◆ ◇	◆ ◇	◆	◆	◆						
36”	◆ ◇	◆ ◇	◆ ◇	◆ ◇	◆ ◇	◆ ◇	◆ ◇	◆ ◇	◆ ◇									
42”	◆ ◇	◆ ◇	◆ ◇	◆ ◇	◆ ◇	◆ ◇	◆ ◇	◆ ◇	◆ ◇									
48”	◆ ◇	◆ ◇	◆ ◇	◆ ◇	◆ ◇	◆ ◇												
54”	◆ ◇	◆ ◇	◆ ◇															
60”	◆ ◇	◆ ◇	◆ ◇															

Note: Above ◆ SBN ◇ SBS

Dual Plate Check Valve

Class	150	300	400	600	900	1500	2500
2”	◆	◆	◆	◆	◆	◆	◆
3”	◆	◆	◆	◆	◆	◆	◆
4”	◆	◆	◆	◆	◆	◆	◆
6”	◆	◆	◆	◆	◆	◆	◆
8”	◆	◆	◆	◆	◆	◆	◆
10”	◆	◆	◆	◆	◆	◆	◆
12”	◆	◆	◆	◆	◆	◆	◆
14”	◆	◆	◆	◆	◆	◆	
16”	◆	◆	◆	◆	◆	◆	
18”	◆	◆	◆	◆	◆	◆	
20”	◆	◆	◆	◆	◆	◆	
22”	◆	◆	◆	◆			
24”	◆	◆	◆	◆	◆	◆	
28”	◆	◆	◆	◆			
30”	◆	◆	◆	◆	◆		
34”	◆	◆	◆	◆			
36”	◆	◆	◆	◆	◆		
40”	◆	◆	◆	◆			
42”	◆	◆	◆	◆			
48”	◆	◆	◆	◆			

NEWAY reserves the right to change design, materials or specifications without notice and free of obligation to furnish or install such changes on products previouly sold.

1. Face to Face F to F Dimension and Valve Weight

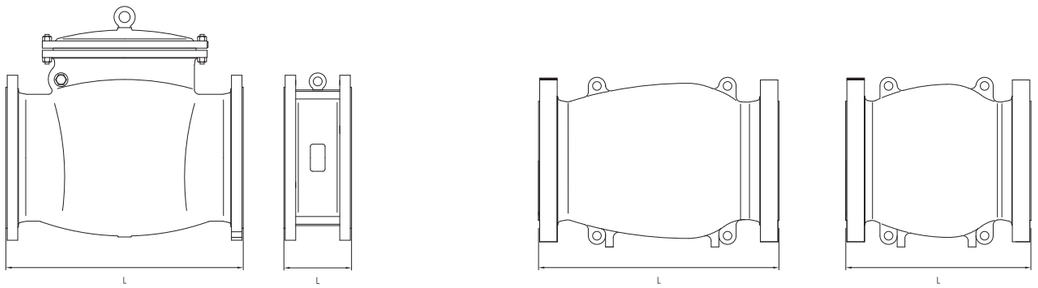

Below data from10" Class150 check valve

Structure	Swing	Dual-plate	Axial Flow	Axial Flow (short)
F to F (mm)	622	146	622	365
Weight (kg)	195	45	184	151

The short face to face design inherently makes dual-plate check valve and axial check valves (short pattem) lighter and more compact than traditional swing check valves, this will lead to ease of installation and lower operation costs.

2. Available Size Range

Swing check valves have a larger internal cavity as compared to the dual plate design, heavier weight and a longer closing travel distance, and the disc will impact heavily on the seat, this action will easily cause water hammer problems and reduce the disc/seat service life. For this reason swing check valves are not generally recommended for piping system above 36".

The dual-plate check valve and Axial flow check valve intemal design minimizes the water hammer problem, it can also significantly improve the flow efficiency which is important for large size piping system. For larger O.D. piping systems, 36" and above, the dual-plate and axial flow check valve designs are recommended and preferred. These valve designs should also be considered for smaller O.D. piping systems where swing check valves have demonstrated flow related problems.

3. Installation Position

The swing check design is not ideal for vertical installation due to its internal structure while the dual-plate and axial flow check valve can be installed in any position because of disc spring assists the tight closure at any position.Moreover dual-plate check valves, have a relatively short face-to-face structure and lower weighted, it is ideal for installation at the location where weight and space are limited.

4. Closure Performance Under Low Pressure

In zero flow conditions, the swing check valve disc/seat seal relies on gravity to remain in the closed position, therefore the sealing performance can be unreliable. The dual plate check and axial flow check designs incorporate.springs to assist closure and keep the disc seat face closed against the body seat for a more reliable isolation in zero flow or low pressure applications.

5. Pressure Range

	Swing	Dual-Plate		Axial Flow
		SBN	SBS	
Class 150	✓	✓	✓	✓
Class 300	✓	✓	✓	✓
Class 600	✓	✓	✓	✓
Class 900	✓	✓		✓
Class 1500	✓	✓		✓
Class 2500	✓	✓		✓

NEWAY reserves the right to change design, materials or specifications without notice and free of obligation to furnish or install such changes on products previouly sold.

6. END Connection

	Swing	Dual-plate		Axial Flow
		SBN	SBS	
Flange	✓	✓	✓	✓
BW	✓	✓		✓
Wafer		✓	✓	
LUG		✓	✓	

7. Noise

- Due to the swing check valve's internal design, the disc can tap against the body seat or against the full open stop causing noise and potential flow turbulence.
- Dual-plate and axial flow check valve design have spring assisted discs which can significantly reduce the water hammer.
- Problem and operational noise. As flow through the valve slows down, the springs cause the disc plates or disc to start the closing motion. When flow stops, the disc plates are already in the closed position. This design can also minimize any back flow through the check valve which does occur with the normal swing check design.

8. Cost

	Swing	Dual-plate	Axial Flow
Manufacturing cost	Medium	Low	High
Maintenance cost	High	Low	Low
Service life	Low	Medium	Long
Life cycle cost	High	Low	Medium

- Dual-plate check valves have a short face-to-face dimension and the weight is only about 25% that of a comparable size swing check valve. Due to the smaller valve configuration, lower weight and low maintenance cost of the dual plate valve desian, the total life cycle cost is the lowered. Depending on the body material, dual plate checks offer a cost savings over the larger size swing check design.
- Axial flow check valves, because of their complicated internal structure and relatively involved longer manufacturing process, in general, their manufacturing cost is the highest among 3 type of check valves. However due to the outstanding flow efficiency and performance, and maintenance free characteristics, the total life cycle cost of the axial flow check valve is competitive compare with swing check valves.

9. Flow Efficiency

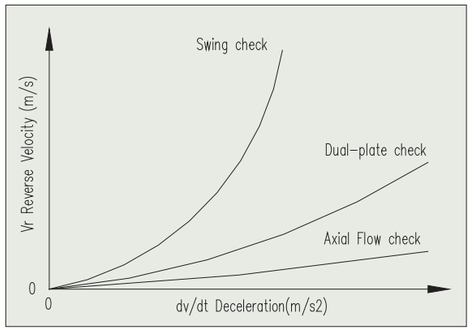

Figure: Dynamic flow performance characteristics.

- Due to swing check valves internal design, water hammer and pressure surge problems can easily occur if the valves is not properly sized for the application. Many piping system failure can be attributed to the improper installation of check valves.
- NEWAY'S axial flow check valve has a venturi port design that reduces flow resistance and improves flow efficiency. The spring aided disc, also gives a tight disc/seat closure seal at all working pressures.
- NEWAY'S dual-plate check valve disc has a slim plate design which offers less restriction to flow at full open position. Compared with many of other manufacturers NEWAY'S dual-plate check valve pressure drop is substantially lower.

NEWAY reserves the right to change design, materials or specifications without notice and free of obligation to furnish or install such changes on products previouly sold.

Dual Plate Check Valve

Neway series SBN check valve has a shorter face-to-face dimension and dual plate design, the end connection options include wafer type, lug type and double-flange type, and are available in size from 2" to 60" and in pressure ratings from ASME class 150 through 2500. A wide range of body and trim materials are optional on customer's request.

Compared to conventional swing check valves, NEWAY'S dual plate check valves have the advantage of zero leakage toward outside (nobolted or threaded connections), cost savings, they can be installed in any line orientation, superior seal performance, offer minimal line shock, lower pressure loss and zero seat wear.

This series of valves are widely used in oil & gas production, petroleum refining, petrochemical, pulp & paper, shipbuilding, and other fluid back flow prevention application.

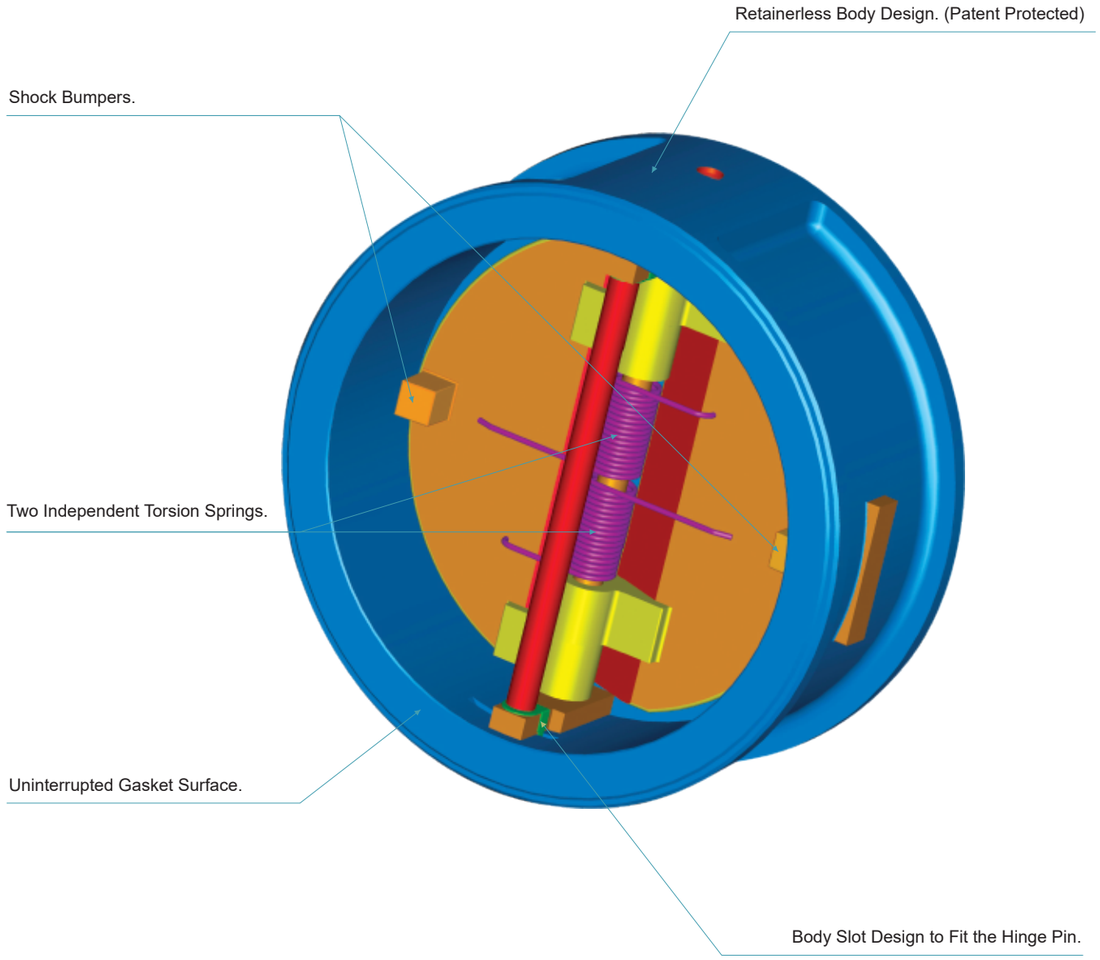

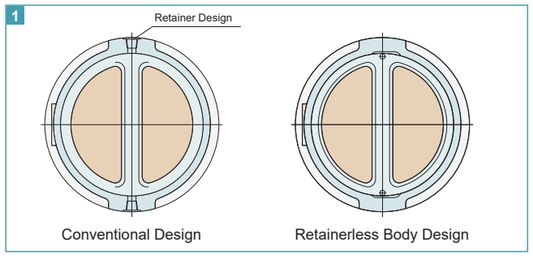

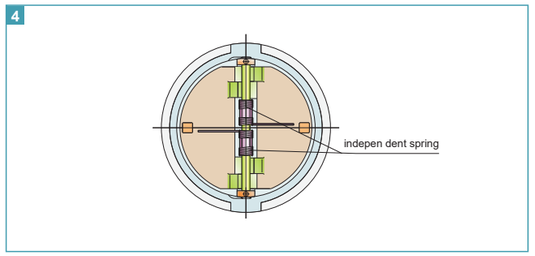

1 Retainerless Body Design (Patent Protected)

NEWAY'S dual plate valve bodies are a one-piece and short cylinder design with no holes through body wall, there is no need for external pins or plugs and no leakage toward outside. For critical service applications, such as hazardous or poisonous medium, this is a superior choice to minimize unwanted leakage to atmosphere.

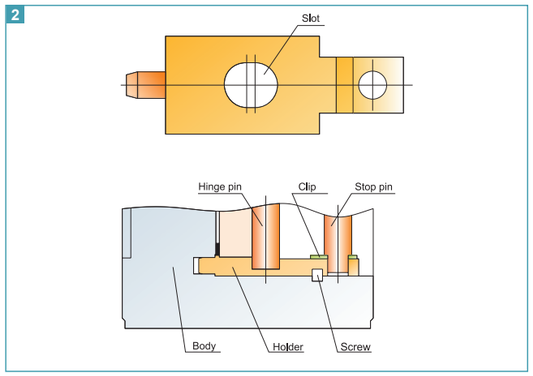

2 Body Slot Design to Fit the Hinge Pin

A disc slot with carefully calculated clearance is designed to fit the hinge pin and allows hinge pin to move in the only direction of flow. The design eliminates the possibility of friction caused by the heel of the dual plate.

3. Shock bumpers

The integral cast bumper on the back of the dual plate is an effective design to prevent the frequent hitting, and reduces the pressing from the dual plate against the stop pin when the valve is fully opened, This extends the service life of the valve and minimizes maintenance cost.

4 Two Independent Torsion Springs

Two high torsion springs ensure valve closure as quick as possible, and reduces water hammer, so as to extend valve life and improve system performance.

5. Uninterrupted Gasket Surface

The Neway dual plate design incorporates an internal retention fitting. The fitting does not encroach the gasket sealing surface, to ensure the effective seal between valve and pipeline.

6. Light weight and compact wafer design

Dual plate wafer designs inherently makes this check valve lighter, which is only 10-25% of the weight of conventional swing check valve, to saves money in initial valve cost and provides lower installation cost.

7. Flexibility in installation position

The spring feature aids in keeping the valve closed and the lighter weight in eliminating pipeline bending loads make the valve flexible installed in any position, to allow you to design your piping layout in the most efficient and least expensive method.

8. Dual plate & Flat seat design

When the valve opens, the heel of the dual plate is lifted in the direction of the flow, to avoid that the heel drag across the seating surface and cause wear. When closing the valve, both the two high torsion springs and the back pressure will force disc toe and heel back in turn to the flat seat to complete the seal.

9. Size Range

Do to features of the wafer check light weight, small installation space, spring aids and easy sealing, the valve may be used in the field of lager piping sizes, even in 60" or above piping system.

NEWAY reserves the right to change design, materials or specifications without notice and free of obligation to furnish or install such changes on products previouly sold.

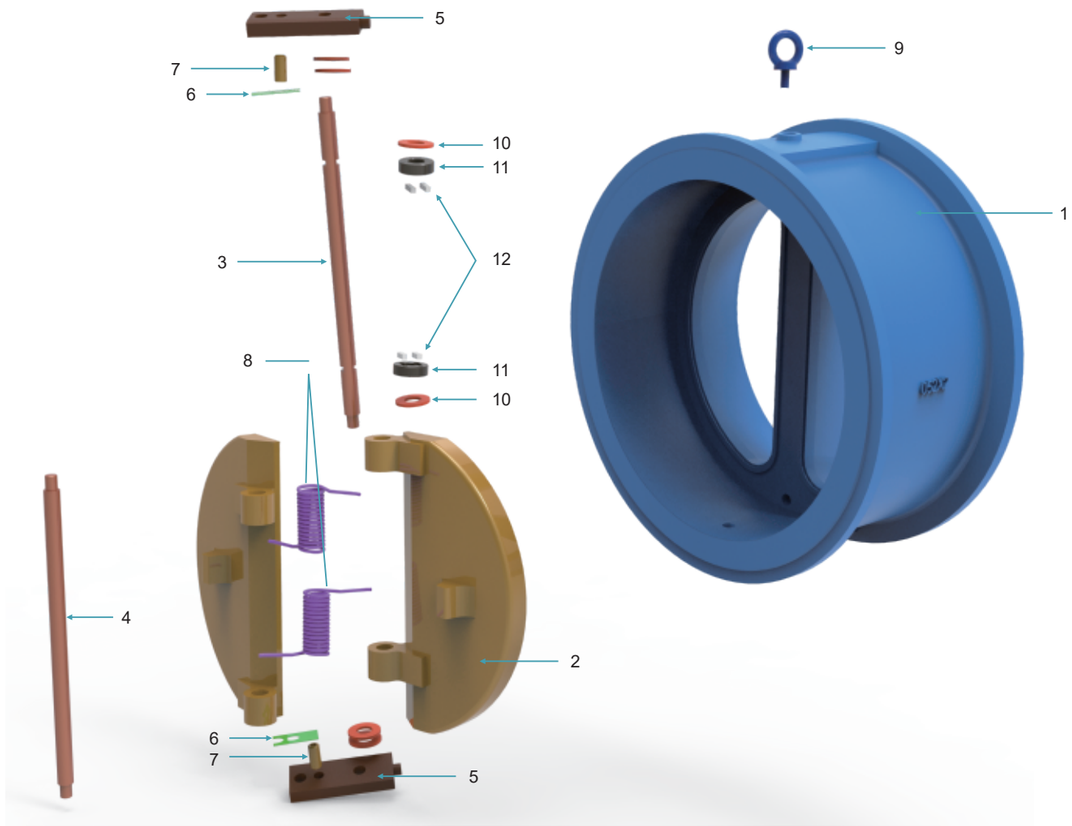

Material

No.	Parts		Materials			
1	Body	SBN	ASTM A216-WCB+STL OVERLAY	ASTM A352-LCC+STL OVERLAY	ASTM A217-WC6+STL OVERLAY	ASTM A351-CF8M+STL OVERLAY
		SBS	ASTM A216-WCB+NBR/EPDM/VITON	ASTM A352-LCC+NBR/EPDM/VITON		ASTM A351-CF8M+NBR/EPDM/VITON
2	Disc		ASTM A217-CA15 or ASTM A216-WCB/CR13 OVERLAY	ASTM A351-CF8M or ASTM A352-LCC/316 OVERLAY	ASTM A217-WC6/STL OVERLAY	ASTM A351 CF8M
3	Hinge pin		ASTM A276-410	ASTM A276-316	ASTM A276-410	ASTM A276-316
4	Stop pin		ASTM A276-410	ASTM A276-316	ASTM A276-410	ASTM A276-316
5	Support adapter		ASTM A276-316L	ASTM A276-316L	ASTM A276-316L	ASTM A276-316L
6	Lock washer		316LS.S	316LS.S	316LS.S	316LS.S
7	Screw		316S.S	316S.S	316S.S	316S.S
8	Spring		INCONEL X-750	INCONEL X-750	INCONEL X-750	INCONEL X-750
9	Hook screw(5" & larger)		AISI 1025	AISI 1025	AISI 1025	304S.S
10	Washer		316LS.S	316LS.S	316LS.S	316LS.S
11	Stop collay		316LS.S	316LS.S	316LS.S	316LS.S
12	Key		316LS.S	316LS.S	316LS.S	316LS.S

NEWAY reserves the right to change design, materials or specifications without notice and free of obligation to furnish or install such changes on products previouly sold.

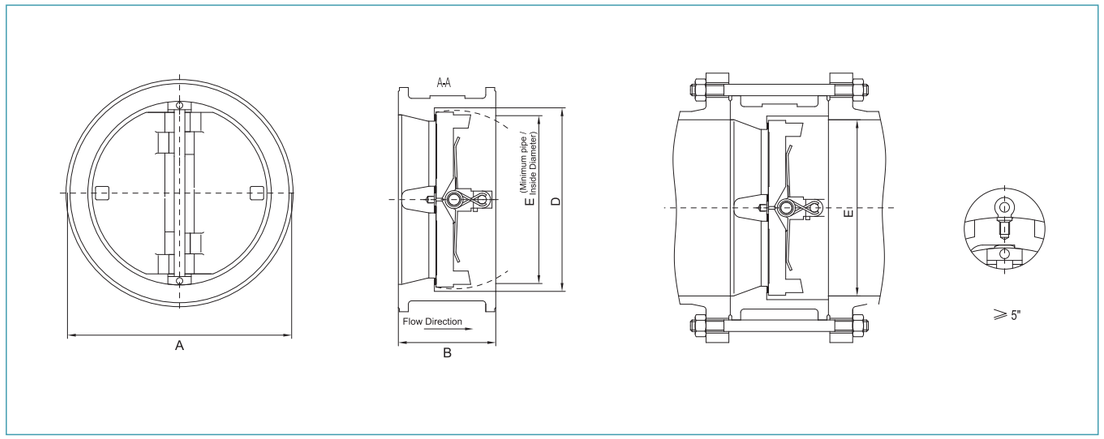

Wafer type

Wafer Type - ASME Class 150

Size		Dimensions								Stud details					End facing	Hook screw hole size		Weight	
		A		B		D		E		No.	Diameter		RF Stud length						
NPS	DN	in	mm	in	mm	in	mm	in	mm		in	mm	in	mm		in	mm	lbs	kg
2”	50	4.09	104	2.38	60	2.36	60	1.34	34	4	0.63	16	5.75	146	RF	-	-	6	3
21/2”	65	4.84	123	2.63	67	2.99	76	2.13	54	4	0.63	16	6.25	159	RF	-	-	11	5
3”	80	5.35	136	2.88	73	3.70	94	2.72	69	4	0.63	16	6.75	171	RF	-	-	11	5
4”	100	6.85	174	2.88	73	4.64	114	3.83	97	8	0.63	16	6.75	171	RF	-	-	18	8
5”	125	7.72	196	3.38	86	5.56	141	4.87	122	8	0.75	19	7.50	191	RF	-	-	28	13
6”	150	8.70	221	3.89	99	6.77	172	5.77	146	8	0.75	19	8.00	203	RF	0.50	13	31	14
8”	200	10.94	278	5.00	127	8.74	222	7.63	194	8	0.75	19	9.50	241	RF	0.50	13	57	26
10”	250	13.35	339	5.75	146	10.83	275	9.56	243	12	0.88	22	10.50	267	RF	0.50	13	98	45
12”	300	16.06	408	7.13	181	12.90	328	11.38	289	12	0.88	22	12.25	311	RF	0.75	19	140	64
14”	350	17.68	449	7.25	184	14.09	358	12.50	318	12	1.00	25	12.75	324	RF	0.75	19	170	77
16”	400	20.12	511	7.48	190	15.98	406	14.57	370	15	1.13	29	13.25	337	RF	1.00	25	230	104
18”	450	21.63	549	8.00	203	18.03	458	16.65	423	16	1.13	29	14.25	362	RF	1.00	25	270	123
20”	500	23.88	606	8.63	219	20.16	512	18.33	466	20	1.25	32	15.25	387	RF	1.00	25	360	163
24”	600	28.25	718	8.75	222	23.10	587	22.63	575	20	1.25	32	16.00	406	RF	1.00	25	480	218
26”	650	30.50	775	8.74	222	24.70	627	23.50	597	24	1.25	32	23.25	591	RF	1.00	25	1000	454
28”	700	32.75	832	12.00	305	27.00	687	25.43	646	28	1.25	32	24.50	622	RF	1.00	25	1200	544
30”	750	34.75	883	12.00	305	29.70	740	28.03	712	28	1.25	32	21.75	552	RF	1.00	25	1000	454
32”	800	37.00	940	14.00	356	31.10	790	29.80	757	28	1.50	38	24.75	629	RF	1.00	25	1400	635
36”	900	41.25	1048	14.50	368	35.50	901	33.43	849	32	1.50	38	26.00	660	RF	1.00	25	1750	794
40”	1000	45.75	1162	17.00	432	40.00	1016	36.02	915	36	1.50	38	28.50	724	RF	1.50	38	2600	1179
42”	1050	48.00	1219	17.00	432	41.16	1046	38.62	981	36	1.50	38	29.00	737	RF	1.50	38	2850	1293
48”	1200	54.50	1384	20.63	524	46.26	1175	43.54	1106	44	1.50	38	31.00	787	RF	1.50	38	4400	1996
54”	1350	61.00	1549	23.25	591	54.00	1372	51.50	1308	44	1.75	44	35.75	908	RF	1.50	38	5500(2)	2495(2)
60”	1500	67.50	1715	26.00	660	58.98	1498	56.00	1422	52	1.75	44	38.75	984	RF	1.50	38	7200(2)	3266(2)

NEWAY reserves the right to change design, materials or specifications without notice and free of obligation to furnish or install such changes on products previouly sold.

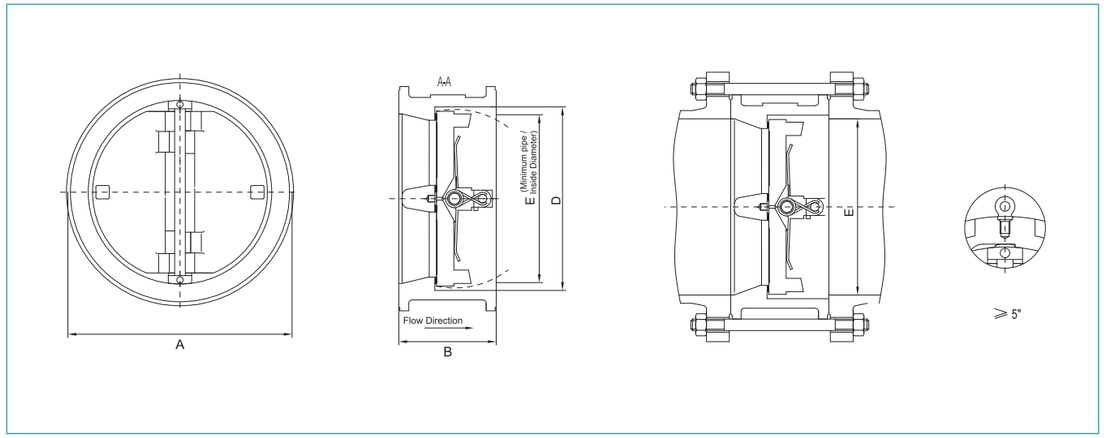

Wafer type

Wafer Type - ASME Class 300

Size		Dimensions								Stud details					End facing	Hook screw hole size		Weight	
		A		B		D		E		No.	Diameter		RF Stud length						
NPS	DN	in	mm	in	mm	in	mm	in	mm		in	mm	in	mm		in	mm	lbs	kg
2”	50	4.37	111	2.38	60	2.36	60	1.34	34	8	0.63	16	6.00	152	RF	-	-	6.5	3
21/2”	65	5.08	129	2.63	67	2.99	76	2.13	54	8	0.75	19	6.75	171	RF	-	-	13	6
3”	80	5.87	149	2.88	73	3.70	94	2.72	69	8	0.75	19	7.25	184	RF	-	-	13	6
4”	100	7.09	180	2.88	73	4.65	118	3.83	97	8	0.75	19	7.50	191	RF	-	-	18	8
5”	125	8.46	215	3.38	86	5.56	141	4.87	122	8	0.75	19	8.25	210	RF	-	-	28	13
6”	150	9.84	250	3.89	99	6.77	172	5.77	146	12	0.75	19	9.00	229	RF	0.50	13	40	18
8”	200	12.13	308	5.00	127	8.74	222	7.63	194	12	0.88	22	10.75	273	RF	0.50	13	68	31
10”	250	14.17	360	5.75	146	10.83	275	9.56	243	16	1.00	25	12.25	311	RF	0.50	13	110	50
12”	300	16.57	421	7.13	181	12.91	328	11.38	289	16	1.13	29	14.25	362	RF	0.75	19	170	77
14”	350	19.06	484	8.75	222	14.09	358	12.50	318	20	1.13	29	16.00	406	RF	0.75	19	290	132
16”	400	21.18	538	9.13	232	15.98	406	14.57	370	20	1.25	32	17.00	432	RF	1.00	25	400	181
18”	450	23.50	597	10.38	264	18.03	458	16.14	410	24	1.25	32	18.50	470	RF	1.00	25	520	236
20”	500	25.75	654	11.50	292	20.20	512	17.94	456	24	1.25	32	20.00	508	RF	1.00	25	700	318
24”	600	30.50	775	12.50	318	23.40	595	21.56	548	24	1.50	38	22.00	559	RF	1.00	25	1050	476
26”	650	32.88	835	12.50	318	25.50	647	23.46	596	28	1.63	41	25.00	635	RF	1.00	25	1250	567
28”	700	35.38	899	14.50	368	27.60	700	26.38	670	28	1.63	41	26.50	673	RF	1.00	25	1500	680
30”	750	37.50	953	14.50	368	29.10	740	27.56	700	28	1.75	44	26.75	679	RF	1.00	25	1650	748
32”	800	39.63	1006	14.50	368	30.80	782	29.21	742	28	1.88	48	29.00	737	RF	1.00	25	2000	907
36”	900	44.00	1118	19.00	483	35.59	904	33.85	860	32	2.00	51	32.75	832	RF	1.00	25	2700	1225
40”	1000	43.88	1114	21.50	546	37.10	942	-	-	32	1.63	41	35.25	895	RF	1.50	38	3400	1542
42”	1050	45.88	1165	22.38	568	38.60	980	35.83	910	32	1.63	41	36.50	927	RF	1.50	38	4200	1905
48”	1200	52.13	1324	24.75	629	43.60	1108	47.00	1194	32	1.88	48	40.50	1029	RF	1.50	38	7350	3334

NEWAY reserves the right to change design, materials or specifications without notice and free of obligation to furnish or install such changes on products previouly sold.

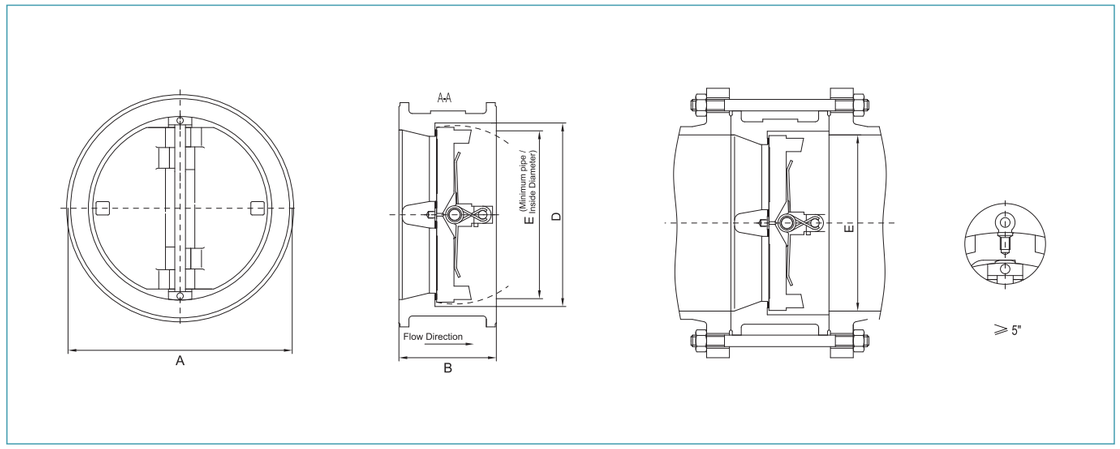

Wafer type

Wafer Type - ASME Class 600

Size		Dimensions								Stud details							End facing	Hook screw hole size		Weight	
		A		B		D		E		No.	Diameter		RF Stud length		RFJ Stud length						
NPS	DN	in	mm	in	mm	in	mm	in	mm		in	mm	in	mm	in	mm		in	mm	lbs	kg
2”	50	4.38	111	2.38	60	2.38	60	1.34	34	8	0.63	16	6.50	165	7.00	178	RF/RTJ#23	-	-	6.5	3
3”	80	5.83	148	2.88	73	3.70	94	2.72	69	8	0.75	19	7.75	197	8.25	210	RF/RTJ#31	-	-	13	6
4”	100	7.63	194	3.13	79	4.65	118	3.83	97	8	0.88	22	8.75	222	9.25	235	RF/RTJ#37	-	-	24	11
6”	150	10.50	267	5.38	137	6.77	172	5.04	128	12	1.00	25	12.00	305	12.75	324	RF/RTJ#45	0.50	13	69	31
8”	200	12.63	321	6.50	165	8.74	222	7.09	180	12	1.13	29	14.25	362	14.75	375	RF/RTJ#49	0.50	13	116	53
10”	250	15.75	400	8.38	213	10.63	270	8.05	206	16	1.25	32	17.00	432	17.50	445	RF/RTJ#53	0.50	13	210	95
12”	300	18.00	457	9.00	229	12.60	320	10.70	272	20	1.25	32	17.75	451	18.25	464	RF/RTJ#57	0.75	19	300	136
14”	350	19.38	492	10.75	273	13.86	352	11.42	290	20	1.38	35	20.25	514	20.75	527	RF/RTJ#61	0.75	19	430	195
16”	400	22.25	565	12.00	305	16.00	406	13.58	345	20	1.50	38	22.25	565	22.75	578	RF/RTJ#65	1.00	25	650	295
18”	450	24.13	613	14.25	362	18.03	458	14.76	375	20	1.63	41	25.25	641	25.75	654	RF/RTJ#69	1.00	25	850	386
20”	500	26.88	683	14.50	368	20.16	512	17.32	440	24	1.63	41	26.00	660	26.75	679	RF/RTJ#73	1.00	25	1125	510
24”	600	31.13	791	17.25	438	23.54	598	20.87	530	24	1.63	41	29.75	756	30.75	781	RF/RTJ#77	1.00	25	1750	794
26”	650	34.13	867	18.00	457	23.82	605	24.00	610	28	1.88	48	31.75	806	32.75	832	RF/RTJ#93	1.00	25	1950	885
28”	700	36.00	914	19.00	483	24.69	627	22.64	575	28	2.00	51	33.25	845	34.25	870	RF/RTJ#94	1.00	25	2300	1043
30”	750	38.25	972	19.88	505	26.81	681	24.80	630	28	2.00	51	34.25	870	35.25	895	RF/RTJ#95	1.00	25	2850	1293
32”	800	40.25	1022	21.00	533	28.50	724	25.59	650	28	2.25	57	36.25	921	37.25	946	RF/RTJ#96	1.00	25	3200	1452
36”	900	44.50	1130	25.00	635	32.13	816	29.53	750	28	2.50	64	41.25	1048	42.50	1080	RF/RTJ#98	1.00	25	4700	2132
40”	1000	45.50	1156	26.00	660	36.00	914	-	-	32	2.25	57	44.50	1130	-	-	RF	1.50	a	5200	2359
42”	1050	48.00	1219	27.60	701	38.00	965	39.50	1003	28	2.50	64	47.25	1200	-	-	RF	1.50	38	6000	2722

NEWAY reserves the right to change design, materials or specifications without notice and free of obligation to furnish or install such changes on products previouly sold.

Wafer Type - ASME Class 900

Size		Dimensions								Stud details							End facing	Hook screw hole size		Weight	
		A		B		D		E		No.	Diameter		RF Stud length		RFJ Stud length						
NPS	DN	in	mm	in	mm	in	mm	in	mm		in	mm	in	mm	in	mm		in	mm	lbs	kg
2”	50	5.63	143	2.75	70	2.24	57	1.34	34	8	0.88	22	8.50	216	8.75	222	RF/RTJ#24	-	-	11.5	3
3”	80	6.63	168	3.25	83	3.39	86	2.48	63	8	0.88	22	8.50	216	9.00	229	RF/RTJ#31	-	-	21	10
4”	100	8.13	206	4.00	102	4.50	114	3.27	83	8	1.13	29	10.25	260	10.75	273	RF/RTJ#37	-	-	43	20
6”	150	11.38	289	6.25	159	6.63	168	5.47	139	12	1.13	29	13.25	337	13.75	349	RF/RTJ#45	0.50	13	125	57
8”	200	14.13	359	8.13	206	8.63	219	6.30	160	12	1.38	35	16.25	413	16.75	425	RF/RTJ#49	0.50	13	275	125
10”	250	17.13	435	9.50	241	10.39	264	7.60	193	16	1.38	35	18.50	470	18.75	476	RF/RTJ#53	0.50	13	400	181
12”	300	19.63	498	11.50	292	12.60	320	9.84	250	20	1.38	35	20.75	527	21.25	540	RF/RTJ#57	0.75	19	450	204
14”	350	20.50	521	14.00	356	13.39	340	10.43	265	20	1.50	38	23.75	603	14.50	622	RF/RTJ#62	0.75	19	700	318
16”	400	22.63	575	15.13	384	15.04	382	10.83	275	20	1.63	41	25.50	648	26.25	667	RF/RTJ#66	1.00	25	950	431
18”	450	25.13	638	17.75	451	17.32	440	10.04	255	20	1.88	48	29.25	743	30.00	762	RF/RTJ#70	1.00	25	1400	635
20”	500	27.50	699	17.75	451	19.49	495	17.52	445	20	2.00	51	30.00	762	31.00	787	RF/RTJ#74	1.00	25	1650	748
24”	600	33.00	838	19.50	495	23.43	595	20.67	525	20	2.50	64	33.75	857	35.00	889	RF/RTJ#78	1.00	25	2325	1055

Wafer Type - ASME Class 1500

Size		Dimensions								Stud details							End facing	Hook screw hole size		Weight	
		A		B		D		E		No.	Diameter		RF Stud length		RFJ Stud length						
NPS	DN	in	mm	in	mm	in	mm	in	mm		in	mm	in	mm	in	mm		in	mm	lbs	kg
2”	50	5.63	143	2.75	70	2.24	57	1.34	34	8	0.88	22	8.50	216	8.75	222	RF/RTJ#24	-	-	11.5	5
3”	80	6.88	175	3.25	83	3.39	86	2.48	63	8	1.13	29	10.25	260	10.50	267	RF/RTJ#35	-	-	23	10
4”	100	8.25	210	4.00	102	4.50	114	3.31	84	8	1.25	32	11.75	298	12.00	305	RF/RTJ#39	-	-	45	20
6”	150	11.13	283	6.25	159	6.63	168	5.47	139	12	1.38	35	16.50	419	17.00	432	RF/RTJ#46	0.50	13	125	57
8”	200	13.88	352	8.13	206	8.27	210	6.69	170	12	1.63	41	19.75	502	20.50	521	RF/RTJ#50	0.50	13	275	125
10”	250	17.13	435	9.75	248	10.24	260	8.07	205	12	1.88	48	23.25	591	23.75	603	RF/RTJ#54	0.50	13	430	195
12”	300	20.50	521	12.00	305	12.28	312	9.06	230	16	2.00	51	27.00	686	28.00	711	RF/RTJ#58	0.75	19	700	318
14”	350	22.75	578	14.00	356	11.26	286	8.27	210	16	2.25	57	30.25	768	31.50	800	RF/RTJ#63	0.75	19	925	420
16”	400	25.25	641	15.13	384	16.00	406	12.81	325	16	2.50	64	32.75	832	34.25	870	RF/RTJ#67	1.00	25	1300	590
18”	450	27.75	705	18.44	468	18.00	457	13.75	349	16	2.75	70	38.00	965	39.50	1003	RF/RTJ#71	1.00	25	1900	862
20”	500	29.75	756	21.00	533	20.00	508	14.75	375	16	3.00	76	42.25	1073	44.00	1118	RF/RTJ#75	1.00	25	2600	1179
24”	600	35.50	902	22.00	559	24.00	610	15.13	384	16	3.50	89	46.25	1175	48.50	1232	RF/RTJ#79	1.00	25	3725	1690

Wafer Type - ASME Class 2500

Size		Dimensions								Stud details							End facing	Hook screw hole size		Weight	
		A		B		D		E		No.	Diameter		RF Stud length		RFJ Stud length						
NPS	DN	in	mm	in	mm	in	mm	in	mm		in	mm	in	mm	in	mm		in	mm	lns	kg
2”	50	5.67	144	2.75	70	2.09	53	1.02	26	8	1.00	25.4	9.84	250	9.84	250	RF/RTJ#26	-	-	18.30	8.30
3”	80	7.68	195	3.38	86	3.23	82	2.28	58	8	1.25	32	12.20	310	12.60	320	RF/RTJ#32	-	-	39.70	18
4”	100	9.17	233	4.12	105	4.13	105	2.68	68	8	1.50	38	14.37	365	14.57	370	RF/RTJ#38	-	-	61.78	28
6”	150	12.44	316	6.25	159	6.50	160	5.00	127	8	2.00	51	20.08	510	20.47	520	RF/RTJ#47	0.50	13	185.30	84
8”	200	15.16	385	8.13	206	8.40	206	6.10	155	12	2.00	51	23.23	590	23.82	605	RF/RTJ#57	0.50	15	423.60	192
10”	250	18.66	474	10.00	254	10.24	260	7.80	198	12	2.50	63.5	29.53	750	30.31	770	RF/RTJ#55	0.50	17	673.00	305

NEWAY reserves the right to change design, materials or specifications without notice and free of obligation to furnish or install such changes on products previouly sold.

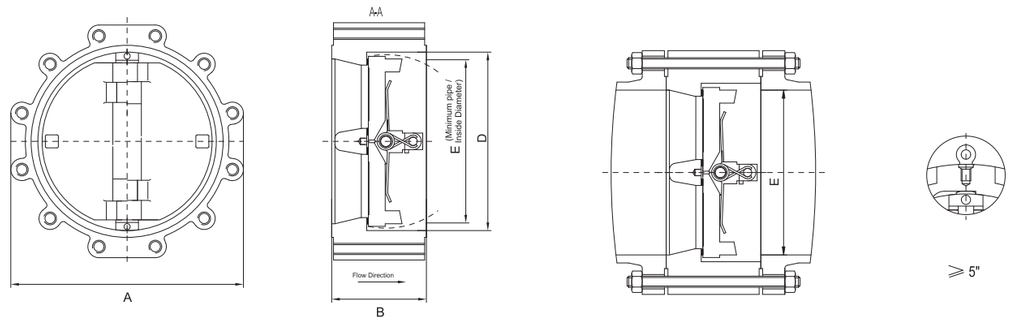

Lug type

Lug Type - ASME Class 150

Size		Dimensions								Stud details					End facing	Hook screw hole size		Weight	
		A		B		D		E		No.	Diameter		RF Stud length						
NPS	DN	in	mm	in	mm	in	mm	in	mm		in	mm	in	mm		in	mm	lbs	kg
2”	50	6.00	152	2.38	60	2.36	60	1.34	34	4	0.63	16	2.75	70	RF	-	-	9	4
2 1/2”	65	7.00	178	2.63	67	2.99	76	2.13	54	4	0.63	16	2.75	70	RF	-	-	24	11
3”	80	7.50	191	2.88	73	3.70	94	2.72	69	4	0.63	16	3.00	76	RF	-	-	18	8
4”	100	9.00	229	2.88	73	4.64	114	3.83	97	8	0.63	16	3.00	76	RF	-	-	33	15
5”	125	10.00	254	3.38	86	5.56	141	4.87	122	8	0.75	19	3.25	83	RF	-	-	53	24
6”	150	11.00	279	3.89	99	6.77	172	5.77	146	8	0.75	19	3.25	83	RF	0.50	13	53	24
8”	200	13.50	343	5.00	127	8.74	222	7.63	194	8	0.75	19	3.50	89	RF	0.50	13	130	59
10”	250	16.00	406	5.75	146	10.83	275	9.56	243	12	0.88	22	3.75	95	RF	0.50	13	216	96
12”	300	19.00	483	7.13	181	12.90	328	11.38	289	12	0.88	22	3.75	95	RF	0.75	19	270	123
14”	350	21.00	533	7.25	184	14.09	358	12.50	318	12	1.00	25	4.25	108	RF	0.75	19	330	150
16”	400	23.50	597	7.48	190	15.98	406	14.57	320	16	1.00	29	4.25	108	RF	1.00	25	420	191
18”	450	25.00	635	8.00	203	18.03	458	16.65	423	16	1.13	29	4.75	121	RF	1.00	25	500	227
20”	500	27.50	699	8.63	219	20.16	512	18.35	466	20	1.13	32	5.00	127	RF	1.00	25	650	295
24”	600	32.00	813	8.75	222	23.10	587	22.63	575	20	1.25	32	5.50	140	RF	1.00	25	850	386
26”	650	34.25	870	8.74	222	24.70	627	23.50	597	24	1.25	32	6.50	165	RF	1.00	25	1600	726
28”	700	36.50	927	12.00	305	27.00	687	25.43	646	28	1.25	32	6.50	165	RF	1.00	25	1900	862
30”	750	38.75	984	12.00	305	29.70	740	28.03	712	28	1.25	32	6.75	171	RF	1.00	25	1700	771
32”	800	41.75	1060	14.00	356	31.10	790	29.80	757	28	1.50	38	7.50	191	RF	1.00	25	2400	1089
36”	900	46.00	1168	14.50	368	35.50	901	33.43	849	32	1.50	38	8.00	203	RF	1.00	25	2800	1270
40”	1000	50.75	1289	17.00	432	40.00	1016	36.02	915	36	1.50	38	8.00	203	RF	1.50	38	4100	1860
42”	1050	53.00	1346	17.00	432	41.16	1046	38.62	981	36	1.50	38	8.25	210	RF	1.50	38	4400	1996
48”	1200	59.50	1511	20.63	524	46.26	1175	43.54	1106	44	1.50	38	8.75	222	RF	1.50	38	6600	2994
54”	1350	66.25	1683	23.25	591	54.00	1372	51.50	1308	44	1.75	44	9.75	248	RF	1.50	38	8300(2)	3765(2)
60”	1500	73.00	1854	26.00	660	58.98	1498	56.00	1422	52	1.75	44	10.25	260	RF	2.00	51	10700(2)	4853(2)

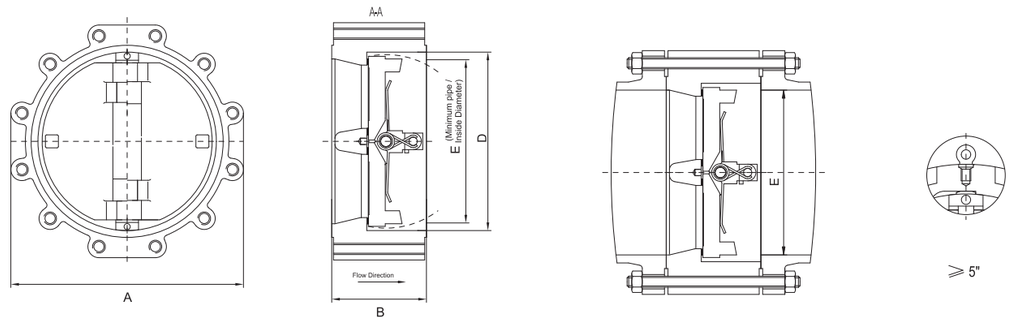

Lug type

Lug Type - ASME Class 300

Size		Dimensions								Stud details					End facing	Hook screw hole size		Weight	
		A		B		D		E		No.	Diameter		RF Stud length						
NPS	DN	in	mm	in	mm	in	mm	in	mm		in	mm	in	mm		in	mm	lbs	kg
2”	50	6.50	165	2.38	60	2.38	60	1.34	34	8	0.63	16	2.75	70	RF	-	-	18	8
2 1/2”	65	7.50	191	2.63	67	2.99	76	2.13	54	8	0.75	19	3.25	83	RF	-	-	26	12
3”	80	8.25	210	2.88	73	3.70	94	2.72	69	8	0.75	19	3.50	89	RF	-	-	33	15
4”	100	10.00	254	2.88	73	4.65	118	3.83	97	8	0.75	19	3.50	89	RF	-	-	55	25
5”	125	11.00	279	3.38	86	5.56	141	4.87	122	8	0.75	19	3.75	95	RF	-	-	70	32
6”	150	12.50	318	3.89	99	6.77	172	5.77	146	12	0.75	19	3.75	95	RF	0.50	13	99	45
8”	200	15.00	381	5.00	127	8.74	222	7.63	194	12	0.88	22	4.25	108	RF	0.50	13	143	65
10”	250	17.50	445	5.75	146	10.83	275	9.56	243	16	1.00	25	4.75	121	RF	0.50	13	233	106
12”	300	20.50	521	7.13	181	12.91	328	11.38	289	16	1.13	29	5.25	133	RF	0.75	19	350	159
14”	350	23.00	584	8.75	222	14.09	358	12.50	318	20	1.13	29	5.25	133	RF	0.75	19	550	250
16”	400	25.50	648	9.13	232	15.96	406	14.57	370	20	1.25	32	5.75	146	RF	1.00	25	750	340
18”	450	28.00	711	10.38	264	18.03	458	16.14	410	24	1.25	32	6.00	152	RF	1.00	25	950	431
20”	500	30.50	775	11.50	292	20.20	512	17.94	456	24	1.25	32	6.00	152	RF	1.00	25	1250	567
24”	600	36.00	914	12.50	318	23.40	595	21.56	548	24	1.50	38	7.00	178	RF	1.00	25	1850	839
26”	650	38.25	972	12.50	318	25.50	647	23.46	596	28	1.63	41	7.75	197	RF	1.00	25	2200	998
28”	700	40.75	1035	14.50	368	27.60	700	26.38	670	28	1.63	41	8.25	210	RF	1.00	25	2700	1225
30”	750	43.00	1092	14.50	368	29.10	740	27.56	700	28	1.75	44	8.75	222	RF	1.00	25	2800	1270
32”	800	45.25	1149	14.50	368	30.80	782	29.21	742	28	1.88	48	9.25	235	RF	1.00	25	3400	1542
36”	900	50.00	1270	19.00	483	35.59	904	33.85	860	32	2.00	51	9.75	248	RF	1.00	25	4600	2087
40”	1000	58.75	1238	21.50	546	37.10	942	-	-	32	1.63	41	9.25	235	RF	1.50	38	5100	2313
42”	1050	50.75	1289	22.38	568	38.60	980	35.83	910	32	1.63	41	9.50	241	RF	1.50	38	6100	2767
48”	1200	57.75	1467	24.75	629	43.60	1108	47.00	1194	32	1.88	48	10.50	267	RF	1.50	38	10000	4536

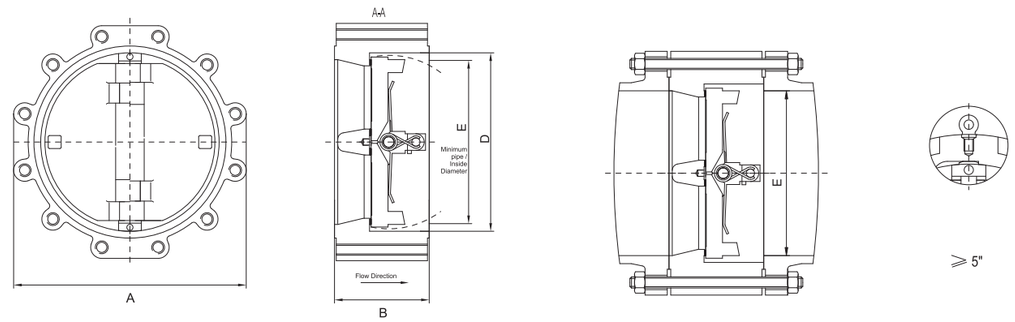

Lug type

Lug Type - ASME Class 600

Size		Dimensions								Stud details							End facing	Hook screw hole size		Weight	
		A		B		D		E		No.	Diameter		RF Stud length		RFJ Stud length						
NPS	DN	in	mm	in	mm	in	mm	in	mm		in	mm	in	mm	in	mm		in	mm	lbs	kg
2”	50	6.50	165	2.38	60	2.38	60	1.34	34	8	0.63	16	3.25	83	3.75	95	RF/RTJ#23	-	-	18	8
3”	80	8.25	210	2.88	73	3.70	94	2.72	69	8	0.75	19	3.75	95	4.25	108	RF/RTJ#31	-	-	33	15
4”	100	10.75	273	3.13	79	4.65	118	3.83	97	8	0.88	22	4.25	108	4.75	121	RF/RTJ#37	-	-	86	39
6”	150	14.00	356	5.38	137	6.77	172	5.04	128	12	1.00	25	5.00	127	5.50	140	RF/RTJ#45	0.50	13	172	78
8”	200	16.50	419	6.50	165	8.74	222	7.09	180	12	1.13	29	5.75	146	6.00	152	RF/RTJ#49	0.50	13	312	142
10”	250	20.00	508	8.38	213	10.63	270	8.05	205	16	1.25	32	6.25	159	6.75	171	RF/RTJ#53	0.50	13	515	234
12”	300	22.00	559	9.00	229	12.60	320	10.70	272	20	1.25	32	6.50	165	6.75	171	RF/RTJ#57	0.75	19	550	250
14”	350	23.75	603	10.75	273	13.86	352	11.42	290	20	1.38	35	6.75	171	7.25	184	RF/RTJ#61	0.75	19	800	363
16”	400	27.00	686	12.00	305	16.00	406	13.58	345	20	1.50	38	7.50	191	7.75	197	RF/RTJ#65	1.00	25	1150	522
18”	450	29.25	743	14.25	362	18.03	458	14.76	375	20	1.63	41	8.00	203	8.50	216	RF/RTJ#69	1.00	25	1550	703
20”	500	32.00	813	14.50	368	20.16	512	17.32	440	24	1.63	41	8.25	210	9.00	229	RF/RTJ#73	1.00	25	1900	862
24”	600	37.00	940	17.25	438	23.54	598	20.87	530	24	1.63	41	8.75	222	9.50	241	RF/RTJ#77	1.00	25	3000	1361
26”	650	40.00	1016	18.00	457	23.82	605	24.00	610	28	1.88	48	9.50	241	10.50	267	RF/RTJ#93	1.00	25	3400	1542
28”	700	42.25	1073	19.00	483	24.69	627	22.64	575	28	2.00	51	10.00	254	11.00	179	RF/RTJ#94	1.00	25	4000	1814
30”	750	44.50	1130	19.88	505	26.81	681	24.80	630	28	2.00	51	10.25	260	11.25	286	RF/RTJ#95	1.00	25	4700	2132
32”	800	47.00	1194	21.00	533	28.50	724	25.59	650	28	2.25	57	11.00	279	12.00	305	RF/RTJ#96	1.00	25	5400	2449
36”	900	51.75	1314	25.00	635	32.13	816	29.53	750	28	2.50	64	11.75	298	13.00	330	RF/RTJ#98	1.00	25	7800	3538
40”	1000	52.00	1321	26.00	660	36.00	914	-	-	32	2.25	57	12.50	318	-	-	RF	1.50	38	8100	3674
42”	1050	55.25	1403	27.60	701	38.00	965	39.50	1003	28	2.50	64	13.50	343	-	-	RF	1.50	38	9600	4355

NEWAY reserves the right to change design, materials or specifications without notice and free of obligation to furnish or install such changes on products previouly sold.

Lug Type - ASME Class 900

Size		Dimensions								Stud details							End facing	Hook screw hole size		Weight	
		A		B		D		E		No.	Diameter		RF Stud length		RFJ Stud length						
NPS	DN	in	mm	in	mm	in	mm	in	mm		in	mm	in	mm	in	mm		in	mm	lbs	kg
2”	50	8.50	216	2.75	70	2.24	57	1.34	34	8	0.88	22	4.25	108	4.75	121	RF/RTJ#24	-	-	37	17
3”	80	9.50	241	3.25	83	3.39	86	2.48	63	8	0.88	22	4.00	102	4.50	114	RF/RTJ#31	-	-	60	27
4”	100	11.50	292	4.00	102	4.50	114	3.27	83	8	1.13	29	5.00	127	5.50	140	RF/RTJ#37	-	-	95	43
6”	150	15.00	381	6.25	159	6.63	168	5.47	139	12	1.13	29	5.25	133	5.75	146	RF/RTJ#45	0.50	13	255	116
8”	200	18.50	470	8.13	207	8.63	219	6.30	160	12	1.38	35	6.25	159	6.75	171	RF/RTJ#49	0.50	13	480	218
10”	250	21.50	546	9.50	241	10.39	264	7.60	193	16	1.38	35	6.50	165	7.00	178	RF/RTJ#53	0.50	13	730	331
12”	300	24.00	610	11.50	292	12.60	320	9.84	250	20	1.38	35	6.75	171	7.25	184	RF/RTJ#57	0.75	19	850	386
14”	350	25.25	641	14.00	356	13.39	340	10.43	265	20	1.50	38	7.25	184	7.75	197	RF/RTJ#62	0.75	19	1250	567
16”	400	27.75	705	15.13	384	15.04	382	10.83	275	20	1.63	41	7.75	197	8.50	216	RF/RTJ#66	1.00	25	1650	748
18”	450	31.00	787	17.75	451	17.32	440	10.04	255	20	1.88	48	8.50	216	9.50	241	RF/RTJ#70	1.00	25	2500	1134
20”	500	33.75	857	17.75	451	19.49	495	17.52	445	20	2.00	51	9.25	235	10.00	254	RF/RTJ#74	1.00	25	2900	1315
24”	600	41.00	1041	19.50	495	23.43	595	20.67	525	20	2.50	64	11.00	279	12.00	305	RF/RTJ#78	1.00	25	4400	1996

Lug Type - ASME Class 1500

Size		Dimensions								Stud details							End facing	Hook screw hole size		Weight	
		A		B		D		E		No.	Diameter		RF Stud length		RFJ Stud length						
NPS	DN	in	mm	in	mm	in	mm	in	mm		in	mm	in	mm	in	mm		in	mm	lbs	kg
2”	50	8.50	216	2.75	70	2.24	57	1.34	34	8	0.88	22	4.25	108	4.75	121	RF/RTJ#24	-	-	35	16
3”	80	10.50	267	3.25	83	3.39	86	2.48	63	8	1.13	29	5.25	133	5.75	146	RF/RTJ#35	0.38	10	71	32
4”	100	12.25	311	4.00	102	4.50	114	3.31	84	8	1.25	32	6.00	152	6.25	159	RF/RTJ#39	0.50	13	150	68
6”	150	15.50	394	6.25	159	6.63	168	5.47	139	12	1.38	35	7.25	184	7.75	197	RF/RTJ#46	0.50	13	265	120
8”	200	19.00	483	8.13	206	8.27	210	6.69	170	12	1.63	41	8.25	210	9.00	229	RF/RTJ#50	0.75	19	625	284
10”	250	23.00	584	9.75	248	10.24	260	8.07	205	12	1.88	48	9.50	241	10.25	260	RF/RTJ#54	0.75	19	798	362
12”	300	26.50	673	12.00	305	12.28	312	9.06	230	16	2.00	51	10.50	267	11.50	292	RF/RTJ#58	0.75	19	1400	635
14”	350	29.50	749	14.00	356	11.26	286	8.27	210	16	2.25	57	11.50	292	12.75	324	RF/RTJ#63	1.00	25	2400	1089
16”	400	32.50	826	15.13	384	16.00	406	12.81	325	16	2.50	64	12.75	324	14.00	356	RF/RTJ#67	1.00	25	2500	1134
18”	450	36.00	914	18.44	468	18.00	457	13.75	349	16	2.75	70	14.00	356	15.25	387	RF/RTJ#71	1.50	38	3900	1769
20”	500	38.75	984	21.00	533	20.00	508	14.75	375	16	3.00	76	15.25	387	16.75	425	RF/RTJ#75	1.50	38	5800	2631
24”	600	46.00	1168	22.00	559	24.00	610	15.13	384	16	3.50	89	17.50	445	19.25	489	RF/RTJ#79	1.50	38	7200	3266

Lug Type - ASME Class 2500

Size		Dimensions								Stud details							End facing	Hook screw hole size		Weight	
		A		B		D		E		No.	Diameter		RF Stud length		RFJ Stud length						
NPS	DN	in	mm	in	mm	in	mm	in	mm		in	mm	in	mm	in	mm		in	mm	lbs	kg
2”	50	9.25	235	2.76	70	2.09	53	1.02	26	8	1.00	25.40	10.04	255	10.04	255	RF/RTJ#26	-	-	37.51	17.00
3”	80	12.01	305	3.39	86	3.23	82	2.28	58	8	1.25	31.80	12.01	305	12.40	315	RF/RTJ#32	-	-	79.43	36.00
4”	100	13.15	334	4.13	105	4.13	105	2.68	68	8	1.50	38.10	14.37	365	14.57	370	RF/RTJ#38	-	-	122.02	55.30
6”	150	17.91	455	6.26	159	6.30	160	5.00	127	8	2.00	50.80	20.08	510	20.47	520	RF/RTJ#47	0.59	15	344.21	156.00
8”	200	21.65	550	8.11	206	8.11	206	6.10	155	12	2.00	50.80	23.23	590	23.82	605	RF/RTJ#51	0.67	17	655.33	297.00
10”	250	26.57	675	10.00	254	10.24	260	7.80	198	12	2.50	63.50	29.53	750	30.31	770	RF/RTJ#55	1.10	28	1195.92	542.00

NEWAY reserves the right to change design, materials or specifications without notice and free of obligation to furnish or install such changes on products previouly sold.

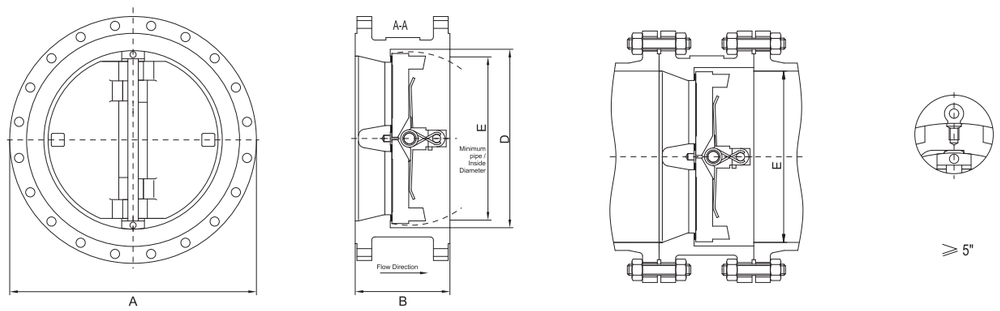

Double flanged type

Double flanged type - ASME Class 150

Size		Dimensions								Stud details					End facing	Weight	
		A		B		D		E		No.	Diameter		RF Stud length				
NPS	DN	in	mm	in	mm	in	mm	in	mm		in	mm	in	mm		lbs	kg
2”	50	5.91	150	4.49	114	2.36	60	1.34	34	4	0.625	15.9	3.54	90	RF	15.45	7
3”	80	7.48	190	4.76	121	3.70	94	2.72	69	4	0.625	15.9	3.74	95	RF	28.68	13
4”	100	9.06	230	4.76	121	4.65	118	3.82	97	8	0.625	15.9	3.74	95	RF	41.92	19
6”	150	11.02	280	5.12	130	6.77	172	5.75	146	8	0.75	19.1	4.13	105	RF	66.20	30
8”	200	13.58	345	5.00	127	8.74	222	7.64	194	8	0.75	19.1	4.53	115	RF	92.67	42
10”	250	15.94	405	5.75	146	10.83	275	9.57	243	12	0.875	22.2	4.72	120	RF	147.84	67
12”	300	19.00	483	7.13	181	12.91	328	11.38	289	12	0.88	22	4.75	121	RF	279	127
14”	350	21.00	533	7.25	184	14.09	358	12.50	318	12	1.00	25	5.25	133	RF	319	145
16”	400	23.50	597	7.50	191	15.98	406	14.76	375	16	1.00	29	5.50	140	RF	387	176
18”	450	25.00	635	8.00	203	18.00	457	16.88	429	16	1.13	29	6.00	152	RF	460	209
20”	500	27.50	699	8.63	219	20.16	512	18.81	478	20	1.13	32	6.25	159	RF	600	272
24”	600	32.00	813	8.75	222	23.43	595	22.63	575	20	1.25	32	7.00	178	RF	862	391
26”	650	34.25	870	14.00	356	26.00	660	24.25	616	24	1.25	32	8.75	222	RF	1500	680
28”	700	36.50	927	15.00	381	28.00	711	-	-	28	1.25	32	9.00	229	RF	1700	771
30”	750	38.75	984	12.00	305	30.00	762	29.25	743	28	1.25	32	9.25	235	RF	1750	794
32”	800	41.75	1060	14.00	356	32.00	813	-	-	28	1.50	38	10.50	267	RF	2300	1043
36”	900	46.00	3368	14.50	368	36.00	914	35.00	889	32	1.50	38	11.25	286	RF	2525	1145
40”	1000	50.75	1289	17.00	432	40.00	1016	-	-	36	1.50	38	11.25	286	RF	3900	1769
42”	1050	53.00	1346	17.00	432	42.00	1067	41.00	1041	36	1.50	38	11.75	298	RF	4220	1914
48”	1200	59.50	1511	20.63	524	48.00	1219	47.00	1194	44	1.50	38	12.50	318	RF	5900	2676
54”	1350	66.25	1683	23.25	591	54.00	1372	51.50	1308	44	1.75	44	14.00	356	RF	7700	3493
60”	1500	73.00	1854	26.00	660	60.00	1524	56.00	1422	52	1.75	44	15.00	381	RF	10000	4536

NEWAY reserves the right to change design, materials or specifications without notice and free of obligation to furnish or install such changes on products previouly sold.

Double flanged type - ASME Class 300

Size		Dimensions								Stud details					End facing	Weight	
		A		B		D		E		No.	Diameter		RF Stud length				
NPS	DN	in	mm	in	mm	in	mm	in	mm		in	mm	in	mm		lbs	kg
2”	50	6.50	165	4.49	114	2.36	60	1.34	34	8	0.625	15.9	3.74	95	RF	19.86	9
3”	80	8.27	210	4.76	121	3.70	94	2.72	69	8	0.75	19.1	4.53	115	RF	37.51	17
4”	100	10.04	255	4.76	121	4.65	118	3.82	97	8	0.75	19.1	4.72	120	RF	59.58	27
6”	150	12.60	320	5.12	130	6.77	172	5.75	146	12	0.75	19.1	4.92	125	RF	103.71	47
8”	200	14.96	380	5.98	152	8.74	222	7.64	194	12	0.875	22.2	5.71	145	RF	176.52	80
10”	250	17.52	445	7.01	178	10.83	275	9.57	243	16	1.00	25.4	6.50	165	RF	231.68	105
12”	300	20.50	521	7.13	181	12.91	328	11.38	289	16	1.13	29	6.75	171	RF	336	152
14”	350	23.00	584	8.75	222	14.09	358	12.50	318	20	1.13	29	7.00	178	RF	431	196
16”	400	25.50	648	9.13	232	16.06	408	14.76	375	20	1.25	32	7.50	191	RF	675	306
18”	450	28.00	711	10.38	264	18.00	457	16.88	429	24	1.25	32	7.75	197	RF	850	386
20”	500	30.50	775	11.50	292	20.16	512	17.94	456	24	1.25	32	8.25	210	RF	1078	489
24”	600	36.00	914	12.50	318	23.43	595	21.56	548	24	1.50	38	9.25	235	RF	1965	891
26”	650	38.25	972	14.00	356	26.00	660	24.38	619	28	1.63	41	10.50	267	RF	2200	998
28”	700	40.75	1035	15.00	381	28.00	711	-	-	28	1.63	41	11.00	279	RF	2600	1179
30”	750	43.00	1092	14.50	368	30.00	762	28.75	730	28	1.75	44	11.75	298	RF	3525	1599
32”	800	45.25	1149	16.00	406	32.00	813	-	-	28	1.88	48	12.75	324	RF	3300	1497
36”	900	50.00	1270	19.00	483	36.00	914	35.00	889	32	2.00	51	13.25	337	RF	4700	2132
40”	1000	58.75	1238	21.50	546	36.00	914	-	-	32	1.63	41	13.25	337	RF	4900	2223
42”	1050	50.75	1289	22.38	568	40.00	1016	41.00	1041	32	1.63	41	13.75	349	RF	5000	2268
48”	1200	57.75	1467	24.75	629	44.00	1118	47.00	1194	32	1.88	48	15.25	387	RF	7400	3357

Double flanged type - ASME Class 600

Size		Dimensions								Stud details							End facing	Weight	
		A		B		D		E		No.	Diameter		RF Stud length		RFJ Stud length				
NPS	DN	in	mm	in	mm	in	mm	in	mm		in	mm	in	mm	in	mm		lbs	kg
2”	50	6.50	165	4.76	121	2.36	60	1.34	34	8	0.625	15.9	4.53	115	4.53	115	RF/RTJ#23	22.07	10
3”	80	8.27	210	5.63	143	3.70	94	2.72	69	8	0.75	19.1	5.12	130	5.12	130	RF/RTJ#31	46.34	21
4”	100	10.83	275	6.50	165	4.65	118	3.82	97	8	0.875	22.2	5.91	150	5.91	150	RF/RTJ#37	86.05	39
6”	150	13.98	355	7.64	194	6.77	172	5.04	128	12	1.00	25.4	6.89	175	6.89	175	RF/RTJ#45	158.87	72
8”	200	16.54	420	8.62	219	8.74	222	7.09	180	12	1.125	28.6	7.68	195	7.87	200	RF/RTJ#49	275.81	125
10”	250	20.08	510	9.61	244	10.63	270	8.07	205	16	1.25	31.8	8.66	220	8.66	220	RF/RTJ#53	439.09	199
12”	300	22.00	559	9.00	229	12.75	324	11.38	289	20	1.25	32	8.50	216	9.00	229	RF/RTJ#57	550	249
14”	350	23.75	603	10.75	273	14.00	356	12.50	318	20	1.38	35	9.00	229	9.50	241	RF/RTJ#61	846	384
16”	400	27.00	686	12.00	305	16.00	406	14.31	364	20	1.50	38	9.75	248	10.25	260	RF/RTJ#65	1010	458
18”	450	29.25	743	14.25	362	18.00	457	16.13	410	20	1.63	41	10.50	267	11.00	279	RF/RTJ#69	1320	599
20”	500	32.00	813	14.50	368	20.00	508	17.94	456	24	1.63	41	11.25	286	11.75	298	RF/RTJ#73	1700	771
24”	600	37.00	940	17.25	438	24.00	610	21.56	548	24	1.63	41	12.25	311	13.00	330	RF/RTJ#77	2580	170
26”	650	40.00	1016	18.00	457	26.00	660	24.00	610	28	1.88	48	13.25	337	14.25	362	RF/RTJ#93	3100	1406
28”	700	42.25	1073	19.00	483	28.00	711	-	-	28	2.00	51	14.00	356	15.00	381	RF/RTJ#94	3800	1724
30”	750	44.50	1130	19.88	505	30.00	762	28.75	730	28	2.00	51	14.00	356	15.00	381	RF/RTJ#95	5390	2445
32”	800	47.00	1194	21.00	533	32.00	813	-	-	28	2.25	57	14.75	375	16.00	406	RF/RTJ#96	6000	2722
36”	900	51.75	1314	25.00	635	36.00	914	33.75	857	28	2.50	64	16.00	406	17.00	432	RF/RTJ#98	6700	3039
42”	1050	55.25	1403	27.60	701	38.00	965	39.50	1003	28	2.50	64	19.50	495	-	-	RF	9400	4264

Double flanged type - ASME Class 900

Size		Dimensions								Stud details							End facing	Weight	
		A		B		D		E		No.	Diameter		RF Stud length		RFJ Stud length				
NPS	DN	in	mm	in	mm	in	mm	in	mm		in	mm	in	mm	in	mm		lbs	kg
12”	300	24.00	610	11.50	292	12.75	324	10.13	257	20	1.38	35	8.75	222	9.25	235	RF/RTJ#57	770	349
14”	350	25.25	641	14.00	356	14.00	356	11.50	292	20	1.50	38	9.25	235	10.00	254	RF/RTJ#62	1240	562
16”	400	27.75	705	15.13	384	16.00	406	12.81	325	20	1.63	41	10.00	254	10.75	273	RF/RTJ#66	1210	549
18”	450	31.00	787	17.75	451	18.00	457	14.44	367	20	1.88	48	11.00	279	11.75	298	RF/RTJ#70	1845	837
20”	500	33.75	857	17.75	451	20.00	508	17.94	456	20	2.00	51	12.00	305	12.75	324	RF/RTJ#74	3940	1787
24”	600	41.00	1041	19.50	495	24.00	610	21.50	546	20	2.50	64	14.00	356	15.00	381	RF/RTJ#78	4175	1894

Note: 1.A=OD 2. B=F to F 3.D=ID 4. E= Minimum ID 5. Yellow part is amened by technical Dept.

NEWAY reserves the right to change design, materials or specifications without notice and free of obligation to furnish or install such changes on products previouly sold.

Axial Flow Check Valve

Neway series SA axial flow check valve is a streamlined venturi port design and available in size from 2" to 48" and in pressure rating from ASME class 150 through 2500 and a wide range of body and trim materials for special application requirement.

In Neway axial flow check valve, the disc is the only moving part to minimize internal wear, and the configuration of disc. seating and body provides streamlined flow path with al venture effect so as to reduce pressure loss as small as possible. The compressed disc spring initiates valve closure as fow slows down and provides quick reaction on flow velocity change.

These unique design features ensure Neway series SA valves can deliver an effective dynamic reaction under various flow deceleration conditions, this design valve can be used in a wide range of critical and demanding service applications, such as fast-reversing reciprocating compressor system or in installations where the check valve must be placed in close proximity to the pump inlet or outlet.

Treamlined Venturi Shape Design to ensure flow efficiency and minimize pressure loss.

Flow Outlet Side Designed to ensure pressure recovery and minimize fluid turbulence.

Disc with metal seal surface to effectively prevent scratching from the lumps in flow.

Integrated riaid casting of valve outer body and inner housing to ensure fire safe and no leakage toward outside

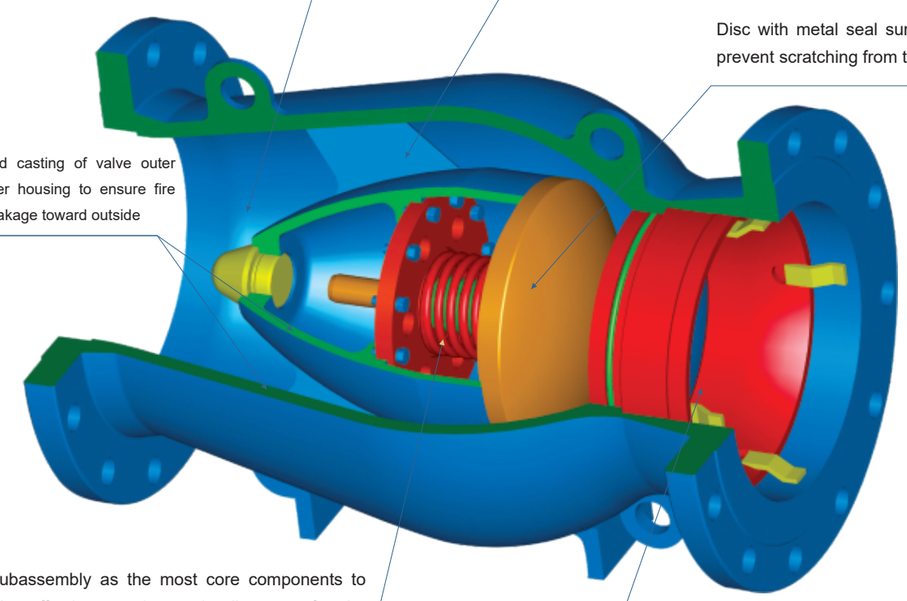

Spring subassembly as the most core components to ensure the effective reaction and adjustment for the change of the flow velocity.

Seat & Flow Inlet Side designed for maximizing fiow impact on disc and providing streamlined flow to minimize pressure loss.

1

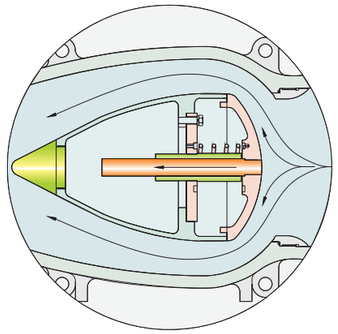

1 The whole valve port geometry is a streamlined venturi shape design: both the body and seat design are suitable for medium flowing while the complete surface of disc is round, and the support frame at valve outlet is designed into taper structure. The design features ensure flow efficiency of the service medium and minimize pressure loss.

2

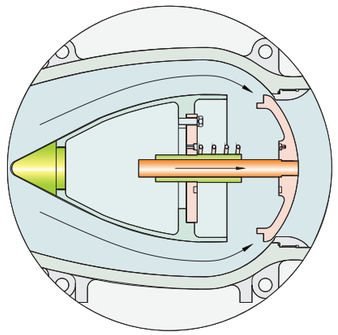

2 As the inlet flow reduces, the disc reacts immediately so as to limit medium backflow and valve slamming. Because of the features of the spring load, low mass disc and shorter travel, the disc can be closed as quickly as possible. At the moment of zero flow the disc is fully closed.

3 Under low pressure conditions, the internal spring preload on the disc drives disc tightly against seat to seal. Axial flow check valves can overcome the generic problem that the conventional swing check valve has with bad sealing performance under the low pressure condition.

4 Water Hammer Free Water hammer problems are eliminated with this design because of the spring loaded disc, properly sized for your specific application, low mass and short closure stroke. The spring initiates disc closure of the disc before water hammer effects can occur.

5 The axial flow check can be installed at any position Comparing to conventional swing check valve, customer can make more much choices.

6 The axial flow check valves are available in both long pattern and short pattern.

7 In axial flow check valve, the disc is the only moving part, offering high operating reliablity.

8 Comparing with two piece body design, the one piece body structure has advantages on fire safe when fire happens, because there is no leakage toward outside.

9 As the sealing surface is a metal material, comparing with soft seal materials, it is more effective to prevent scratching the seal surface from particles in flow media.

10 Valve internal port geometry is a streamlined venture shape design, to ensure minimal pressure loss. This energy saving feature typically experiences less than half of the pressure drop

NEWAY reserves the right to change design, materials or specifications without notice and free of obligation to furnish or install such changes on products previouly sold.

Below is some figures from CF desing software's analysis on axial flow check valve:

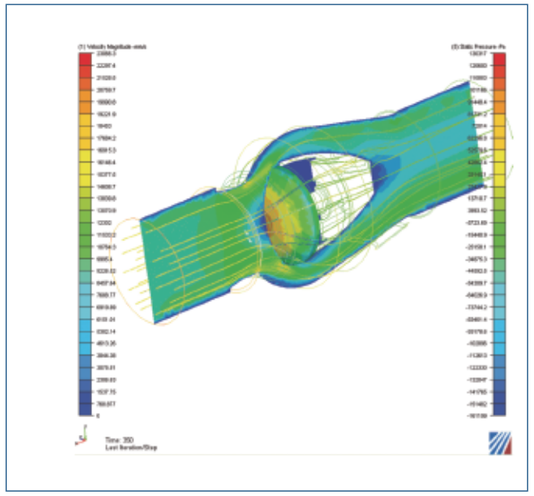

Figure 1: Flow trace and velocity distribution at cutting plane

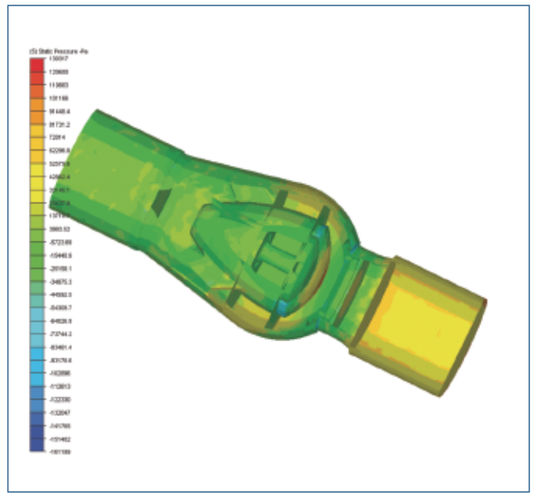

Figure 2: Internal Component's Pressur Distribution shown by virtue of Model "Exploding Picture"

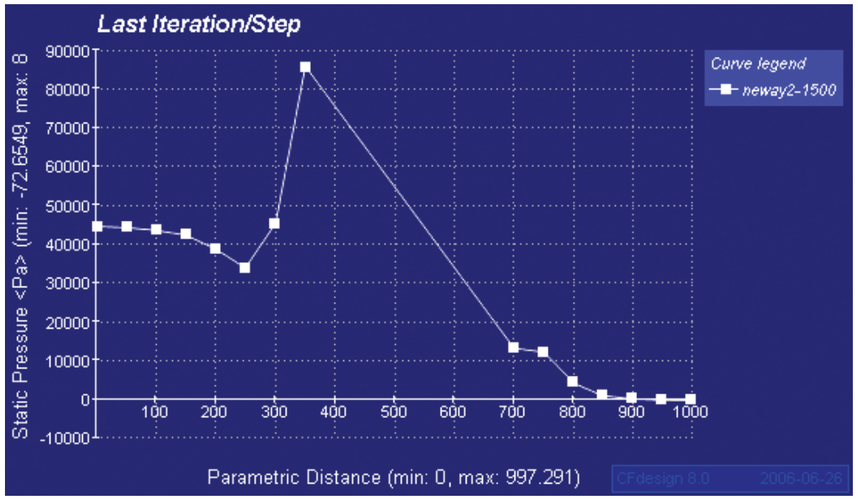

Figure 3: Pressure Curve Between Inlet Section Centre and Outlet Section Centre

NEWAY reserves the right to change design, materials or specifications without notice and free of obligation to furnish or install such changes on products previouly sold.

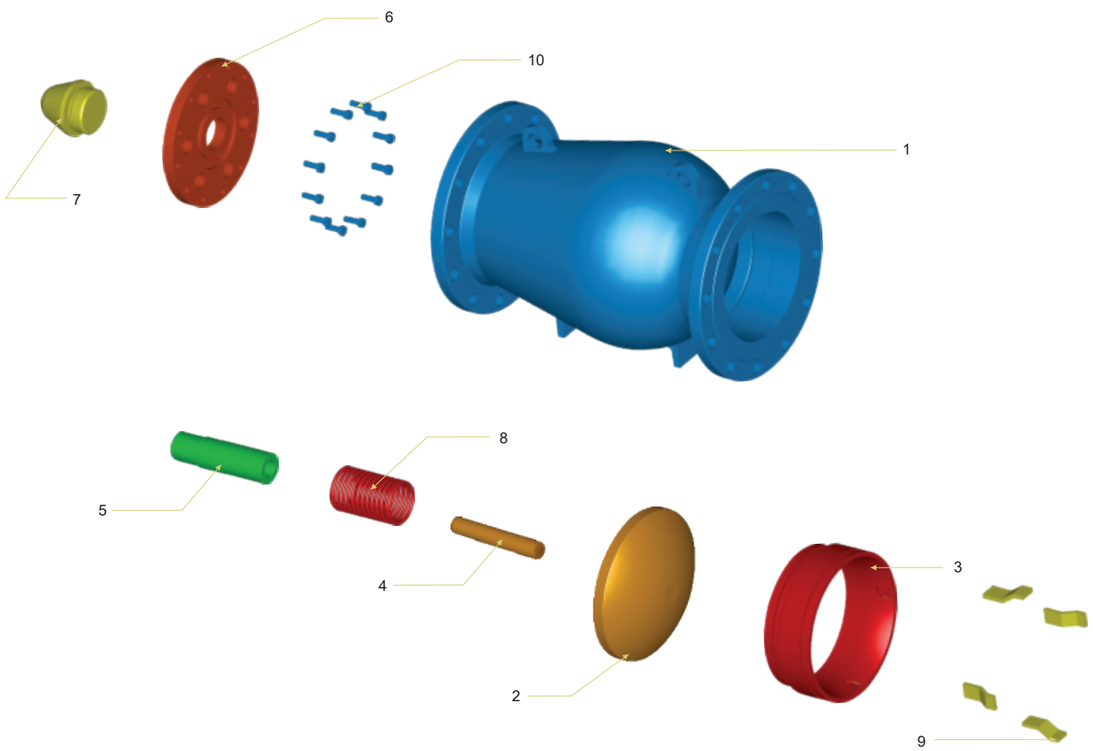

Materials

No.	Part	Material			
1	BODY	ASTM A216-WCB	ASTM A352-LCC	ASTM A217-WC6	ASTM A351 CF8M
2	DISC	ASTM A216-WCB/ER410 ASTM A217-CA15(below)	ASTM A352-LCC/316.OVERLAY	ASTM A217-WC6/STL.OVERLAY	ASTM A351 CF8M
3	SEAT	ASTM A 105/STL.OVERLAY	ASTM A 182-F316/STL.OVERLAY	ASTM A 182-F11/STL.OVERLAY	ASTM A 182-F316/STL.OVERLAY
4	LEADING POLE	304S.S	316S.S	304S.S	316S.S
5	GUIDEDING SLEEVE	304S.S	316S.S	304S.S	316S.S
6	SUPPORTING PLATE	ASTM A105	316S.S	304S.S	316S.S
7	BLOCKING PLATE	ASTM A105	316S.S	304S.S	316S.S
8	SPRING	INCONEL X-750	INCONEL X-750	INCONEL X-750	INCONEL X-750
9	RETAINING TAB	AISI 1025	AISI 1025	AISI 1025	AISI 1025
10	STUD	B8	B8	B8	B8

NEWAY reserves the right to change design, materials or specifications without notice and free of obligation to furnish or install such changes on products previouly sold.

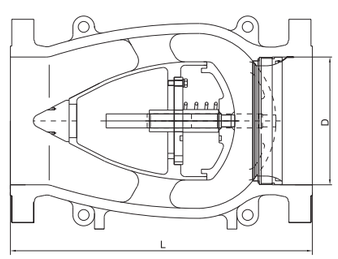

Long pattern

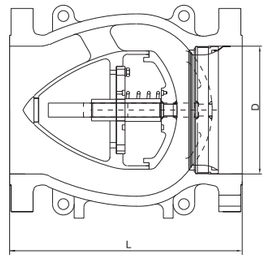

Short pattern

Flange End - ASME Class 150

Size		Dimensions						Weight			
		D		L							
				Long pattern(RF/BW)		Short pattern(RF/BW)		Long pattern		Short pattern	
NPS	DN	in	mm	in	mm	in	mm	lbs	kg	lbs	kg
2	50	2.01	51	7.99	203	5.91	150	31	14	-	-
3	80	2.99	76	9.49	241	7.09	180	53	24	-	-
4	100	4.02	102	11.5	292	9.25	235	86	39	-	-
6	150	5.98	152	14.02	356	10.63	270	148	67	134	61
8	200	7.99	203	19.49	495	12.99	330	260	118	216	98
10	250	10	254	24.49	622	15.16	385	406	184	333	151
12	300	12.01	305	27.52	699	18.70	475	584	265	474	215
14	350	13.27	337	30.98	787	20.08	510	787	357	631	286
16	400	15.24	387	34.02	864	21.46	545	1091	495	877	398
18	450	17.24	438	38.5	978	24.02	610	1157	525	959	435
20	500	19.25	489	38.5	978	26.57	675	1770	803	1504	682
22	550	21.26	540	42.01	1067	-	-	1892	858	1590	721
24	600	23.27	591	50.98	1295	31.89	810	2610	1184	2167	983
28	700	27.01	686	57.01	1448	37.20	945	3316	1504	-	-
30	750	29.02	737	60	1524	39.76	1010	4125	1871	-	-
34	850	32.76	832	-	-	-	-	5761	2613	-	-
36	900	34.49	876	77.01	1956	47.83	1215	6486	2942	-	-
40	1000	38.5	978	85	2159	53.15	1350	8765	3976	-	-
42	1050	40.24	1022	89.02	2261	55.71	1415	10423	4728	-	-
48	1200	45.98	1168	101.02	2566	63.58	1615	13843	6279	-	-

Note:Short pattern is a Neway Standard dimension

Flange End - ASME Class 300

Size		Dimensions						Weight			
		D		L							
				Long pattern(RF/BW)		Short pattern(RF/BW)		Long pattern		Short pattern	
NPS	DN	in	mm	in	mm	in	mm	lbs	kg	lbs	kg
2	50	2.01	51	10.51	267	5.91	150	40	18	-	-
3	80	2.99	76	12.52	318	7.09	180	75	34	-	-
4	100	4.02	102	14.02	356	9.25	235	121	55	-	-
6	150	5.98	152	17.52	445	10.63	270	220	100	192	87
8	200	7.99	203	20.98	533	12.99	330	370	168	317	144
10	250	10	254	24.49	622	15.16	385	606	275	507	230
12	300	12.01	305	27.99	711	18.70	475	802	364	675	306
14	350	13.27	337	32.99	838	20.08	510	1098	498	915	415
16	400	15.24	387	34.02	864	21.46	545	1440	653	1197	543
18	450	17.24	438	38.5	978	24.02	610	1967	892	1609	730
20	500	19.25	489	40	1016	26.57	675	2533	1149	2202	999
22	550	21.26	540	44.02	1118	-	-	3038	1378	2612	1185
24	600	23.27	591	52.99	1346	31.89	810	3699	1678	3144	1426
28	700	27.01	686	59.02	1499	37.20	945	5101	2314	4361	1978
30	750	29.02	737	62.76	1594	39.76	1010	6195	2810	5265	2388
34	850	32.76	832	-	-	-	-	8545	3876	-	-
36	900	34.49	876	82.01	2083	47.83	1215	9647	4376	-	-
40	1000	38.5	978	95.98	2438	53.15	1350	12064	5472	-	-
42	1050	40.24	1022	103.03	2617	55.71	1415	13521	6133	-	-
48	1200	45.98	1168	124.06	3151	63.58	1615	17855	8099	-	-

Note:Short pattern is a Neway Standard dimension

NEWAY reserves the right to change design, materials or specifications without notice and free of obligation to furnish or install such changes on products previouly sold.

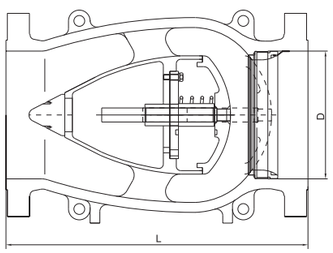

Long pattern

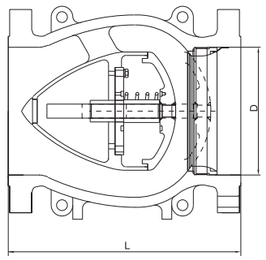

Short pattern

Flange End - ASME Class 400

Size		Dimensions										Weight			
		D		L											
				Long pattern(RF/BW)		Long pattern(RTJ)		Short pattern(RF/BW)		Short pattern(RTJ)		Long pattern		Short pattern	
NPS	DN	in	mm	in	mm	in	mm	in	mm	in	mm	lbs	kg	lbs	kg
2	50	2.01	51	11.5	292	11.61	295	5.91	150	6.02	153	51	23	-	-
3	80	2.99	76	14.02	356	14.13	359	7.09	180	7.20	183	97	44	-	-
4	100	4.02	102	17.01	432	17.13	435	9.25	235	9.37	238	154	70	-	-
6	150	5.98	152	22.01	559	22.13	562	10.63	270	10.75	273	295	134	247	112
8	200	7.99	203	25.98	660	26.1	663	12.99	330	13.11	333	492	223	410	186
10	250	10	254	30.98	787	31.1	790	15.16	385	15.28	388	743	337	604	274
12	300	12.01	305	32.99	838	33.11	841	18.70	475	18.82	478	957	434	736	334
14	350	13.27	337	35	889	35.12	892	20.08	510	20.20	513	1268	575	988	448
16	400	15.24	387	39.02	991	39.13	994	21.46	545	21.57	548	-	-	-	-
18	450	17.24	438	42.99	1092	43.11	1095	24.02	610	24.13	613	-	-	-	-
20	500	19.25	489	47.01	1194	47.24	1200	26.57	675	26.81	681	-	-	-	-
22	550	21.26	540	50.98	1295	51.38	1305	-	-	-	-	-	-	-	-
24	600	23.27	591	55	1397	55.39	1407	31.89	810	32.28	820	-	-	-	-
28	700	27.01	686	62.99	1600	63.5	1613	37.20	945	37.72	958	-	-	-	-
30	750	29.02	737	65	1651	65.51	1664	39.76	1010	40.28	1023	-	-	-	-
34	850	32.76	832	-	-	-	-	-	-	-	-	-	-	-	-
36	900	34.49	876	82.01	2083	82.64	2099	47.83	1215	48.46	1231	-	-	-	-
40	1000	38.5	978	90	2286	-	-	53.15	1350	53.78	1366	-	-	-	-
42	1050	40.24	1022	95.98	2438	-	-	55.71	1415	56.34	1431	-	-	-	-
48	1200	45.98	1168	100	2540	-	-	63.58	1615	64.21	1631	-	-	-	-

Note:Short pattern is a Neway Standard dimension

Flange End - ASME Class 600

Size		Dimensions										Weight			
		D		L											
				Long pattern(RF/BW)		Long pattern(RTJ)		Short pattern(RF/BW)		Short pattern(RTJ)		Long pattern		Short pattern	
NPS	DN	in	mm	in	mm	in	mm	in	mm	in	mm	lbs	kg	lbs	kg
2	50	2.01	51	11.5	292	11.61	295	5.91	150	6.02	153	53	24	-	-
3	80	2.99	76	14.02	356	14.13	359	7.09	180	7.20	183	97	44	-	-
4	100	4.02	102	17.01	432	17.13	435	9.25	235	9.37	238	168	76	-	-
6	150	5.98	152	22.01	559	22.13	562	10.63	270	10.75	273	368	167	309	140
8	200	7.99	203	25.98	660	26.1	663	12.99	330	13.11	333	615	279	514	233
10	250	10	254	30.98	787	31.1	790	15.16	385	15.28	388	966	438	785	356
12	300	12.01	305	32.99	838	33.11	841	18.70	475	18.82	478	1261	572	966	438
14	350	13.27	337	35	889	35.12	892	20.08	510	20.20	513	1563	709	1219	553
16	400	15.24	387	39.02	991	39.13	994	21.46	545	21.57	548	2310	1048	1854	841
18	450	17.24	438	42.99	1092	43.11	1095	24.02	610	24.13	613	2857	1296	2231	1012
20	500	19.25	489	47.01	1194	47.24	1200	26.57	675	26.81	681	3739	1696	2890	1311
22	550	21.26	540	50.98	1295	51.38	1305	-	-	-	-	4603	2088	3589	1628
24	600	23.27	591	55	1397	55.39	1407	31.89	810	32.28	820	5172	2346	4081	1851
28	700	27.01	686	62.99	1600	63.5	1613	37.20	945	37.72	958	8113	3680	6570	2980
30	750	29.02	737	65	1651	65.51	1664	39.76	1010	40.28	1023	9700	4400	8031	3643
34	850	32.76	832	-	-	-	-	-	-	-	-	13139	5960	10512	4768
36	900	34.49	876	82.01	2083	82.64	2099	47.83	1215	48.46	1231	14286	6480	11343	5145
40	1000	38.5	978	90	2286	-	-	53.15	1350	53.78	1366	15697	7120	-	-
42	1050	40.24	1022	95.98	2438	-	-	55.71	1415	56.34	1431	17284	7840	-	-
48	1200	45.98	1168	100	2540	-	-	63.58	1615	64.21	1631	19577	8880	-	-

Note:Short pattern is a Neway Standard dimension

Flange End - ASME Class 900

Size		Dimensions										Weight			
		D		L											
				Long pattern(RF/BW)		Long pattern(RTJ)		Short pattern(RF/BW)		Short pattern(RTJ)		Long pattern		Short pattern	
NPS	DN	in	mm	in	mm	in	mm	in	mm	in	mm	lbs	kg	lbs	kg
2	50	2.01	51	14.49	368	14.61	371	6.69	170	6.81	173	128	58	-	-
3	80	2.99	76	15	381	15.12	384	7.87	200	7.99	203	196	89	-	-
4	100	4.02	102	17.99	457	18.11	460	9.25	235	9.37	238	251	114	203	92
6	150	5.98	152	24.02	610	24.13	613	10.63	270	10.75	273	485	220	390	177
8	200	7.99	203	29.02	737	29.13	740	12.99	330	13.11	333	924	419	710	322
10	250	10	254	32.99	838	33.11	841	16.73	425	16.85	428	1429	648	1056	479
12	300	12.01	305	37.99	965	38.11	968	19.69	500	19.80	503	1865	846	1351	613
14	350	12.76	324	40.51	1029	40.87	1038	21.65	550	22.05	560	2434	1104	1907	865
16	400	14.76	375	44.49	1130	44.88	1140	22.83	580	23.23	590	3351	1520	2778	1260
18	450	16.73	425	47.99	1219	48.5	1232	25.59	650	26.10	663	5291	2400	-	-
20	500	18.62	473	52.01	1321	52.48	1333	26.97	685	27.48	698	7055	3200	-	-
24	600	22.52	572	60.98	1549	61.73	1568	33.07	840	33.82	859	9171	4160	-	-
30	750	28.11	714	72.99	1854	73.86	1876	-	-	-	-	15609	7080	-	-
36	900	33.74	857	84.88	2156	-	-	-	-	-	-	22487	10200	-	-

Note:Short pattern is a Neway Standard dimension

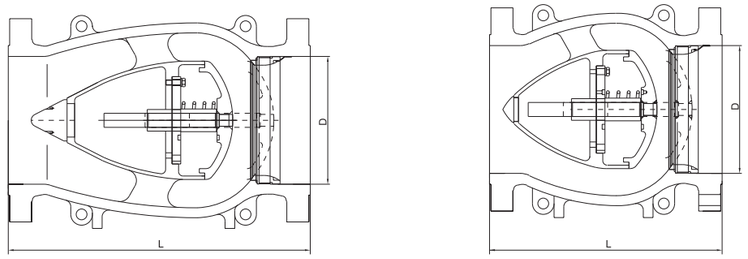

Long pattern

Short pattern

Flange End - ASME Class 1500

Size		Dimensions										Weight			
		D		L											
				Long pattern(RF/BW)		Long pattern(RTJ)		Short pattern(RF/BW)		Short pattern(RTJ)		Long pattern		Short pattern	
NPS	DN	in	mm	in	mm	in	mm	in	mm	in	mm	lbs	kg	lbs	kg
2	50	2.01	51	14.49	368	14.61	371	6.69	170	6.81	173	126	57	-	-
3	80	2.99	76	18.5	470	18.62	473	8.66	220	8.78	223	240	109	-	-
4	100	4.02	102	21.5	546	21.61	549	10.63	270	10.75	273	386	175	-	-
6	150	5.75	146	27.76	705	27.99	711	13.39	340	13.62	346	970	440	772	350
8	200	7.64	194	32.76	832	33.15	842	14.96	380	15.35	390	1459	662	1166	529
10	250	9.49	241	39.02	991	39.37	1000	17.72	450	18.11	460	2604	1181	2132	967
12	300	11.38	289	44.49	1130	45.12	1146	20.47	520	21.10	536	3534	1603	2553	1158
14	350	12.52	318	49.49	1257	50.24	1276	21.65	550	22.40	569	5397	2448	3940	1787
16	400	14.25	362	54.49	1384	55.39	1407	22.83	580	23.70	602	7937	3600	5944	2696
18	450	-	-	60.51	1537	61.38	1559	25.59	650	26.46	672	10758	4880	8069	3660
20	500	-	-	65.51	1664	66.38	1686	26.97	685	27.83	707	14109	6400	10679	4844
24	600	-	-	76.5	1943	77.64	1972	33.07	840	34.17	868	17284	7840	-	-

Note:Short pattern is a Neway Standard dimension

Flange End - ASME Class 2500

Size		Dimensions										Weight			
		D		L											
				Long pattern(RF/BW)		Long pattern(RTJ)		Short pattern(RF/BW)		Short pattern(RTJ)		Long pattern		Short pattern	
NPS	DN	in	mm	in	mm	in	mm	in	mm	in	mm	lbs	kg	lbs	kg
2	50	1.73	44	17.76	451	17.87	454	8.66	220	8.78	223	256	116	-	-
3	80	2.52	64	22.76	578	22.99	584	11.81	300	12.05	306	582	264	-	-
4	100	3.5	89	26.5	673	26.89	683	13.78	350	14.17	360	1146	520	939	426
6	150	5.24	133	35.98	914	36.5	927	15.35	390	15.87	403	2469	1120	1975	896
8	200	7.13	181	40.24	1022	40.87	1038	16.93	430	17.56	446	4268	1936	3329	1510
10	250	8.86	225	50	1270	50.87	1292	21.26	540	22.13	562	6614	3000	-	-
12	300	10.51	267	55.98	1422	56.89	1445	23.62	600	24.49	622	9700	4400	-	-

Note:Short pattern is a Neway Standard dimension

Product Warranty

Seller will replace without charge or refund the purchase price of products provided by Seller which prove to be defective in material or workmanship, provided in each case that the product is properly installed and is used in the service for which Seller recommends it and that written claim, specifying the alleged defect, is presented to the Seller within 18 months from the date of shipment or 12 months after installation, whichever occurs first. Seller shall in no event bear any labor, equipment, engineering or other costs incurred in connection with repair of replacement. The warranty stated in this paragraph is in lieu of all other warranties, either expressed or implied. With respect to warranties, this paragraph states Buyer's exclusive remedy and seller's exclusive liability.